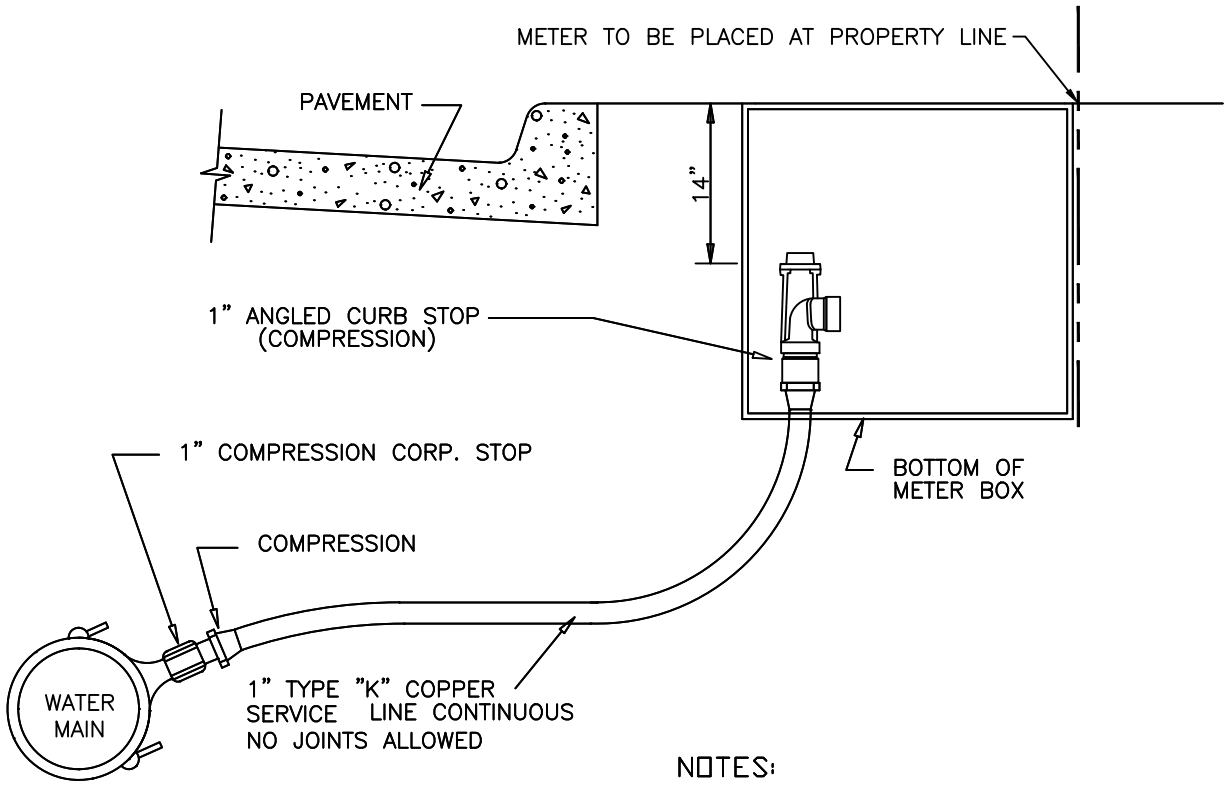

NOTES:

1. WHEN TAPPING EXISTING OR PVC MAINS USE DOUBLE STRAP STAINLESS STEEL OR EPOXY COATED CAST IRON SADDLES.
2. ALL COPPER FITTINGS SHALL BE COMPRESSION FITTINGS.
3. ALL SADDLES AND CORP. STOPS SHALL HAVE CC THREADS
4. METER SHALL NOT BE INSTALLED IN SIDEWALKS OR DRIVEWAYS.
5. METER BOX TO BE FURNISHED BY AND INSTALLED BY CONTRACTOR.
6. METER BOX SHALL BE 18" DIAMETER PVC WITH CAST IRON RING AND LID. WHITE RHINO OR APPROVED EQUAL.
7. CURB STOP SHALL BE MUELLER H-14258N OR EQUIVALENT (110 CTS X SWIVLE NUT)
8. ALL METER CAN LIDS SHALL HAVE AMR READER HOLE
9. CORP. STOP SHALL BE MUELLER H-15008N OR EQUIVALENT

NOT TO SCALE

CITY OF WEATHERFORD	DATE	UTILITY DEPARTMENT	SHEET. #
	01/2016		U1
	DRAWN BY	1 INCH SERVICE DETAIL	
	CITY OF WEATHERFORD		

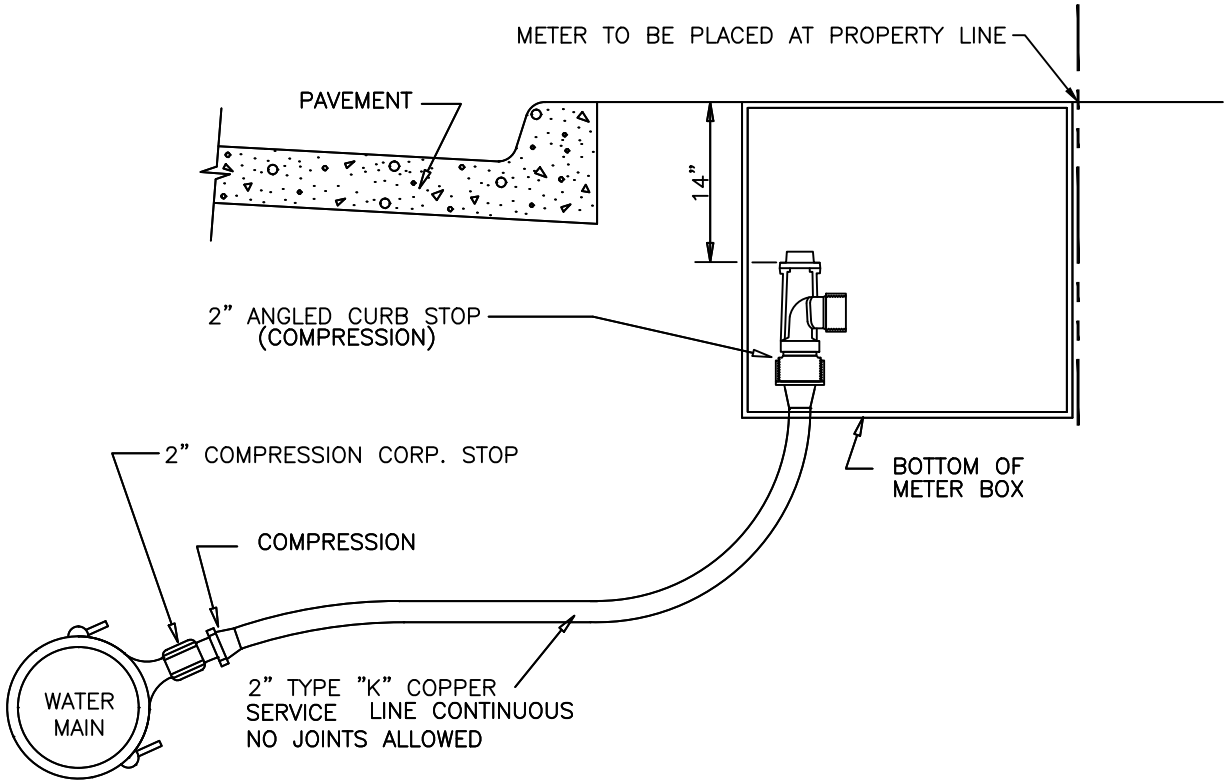

NOTES:

1. WHEN TAPPING EXISTING OR PVC MAINS USE DOUBLE STRAP STAINLESS STEEL OR EPOXY COATED CAST IRON SADDLES.
2. ALL COPPER FITTINGS SHALL BE COMPRESSION FITTINGS.
3. ALL SADDLES AND CORP. STOPS SHALL HAVE CC THREADS
4. METER SHALL NOT BE INSTALLED IN SIDEWALKS OR DRIVEWAYS.
5. METER BOX TO BE FURNISHED BY AND INSTALLED BY CONTRACTOR.
6. METER BOX SHALL BE 24" DIAMETER PVC WITH CAST IRON RING AND LID. WHITE RHINO OR APPROVED EQUAL.
7. CURB STOP SHALL BE MUELLER H-14277N OR EQUIVALENT (110 CTS X FLANGE)
8. ALL METER CAN LIDS SHALL HAVE AMR READER HOLE
9. CORP. STOP SHALL BE MUELLER H-15008N OR EQUIVALENT

NOT TO SCALE

CITY OF WEATHERFORD	DATE 01/2016	UTILITY DEPARTMENT	SHEET. #
	DRAWN BY CITY OF WEATHERFORD	2 INCH SERVICE DETAIL	U2

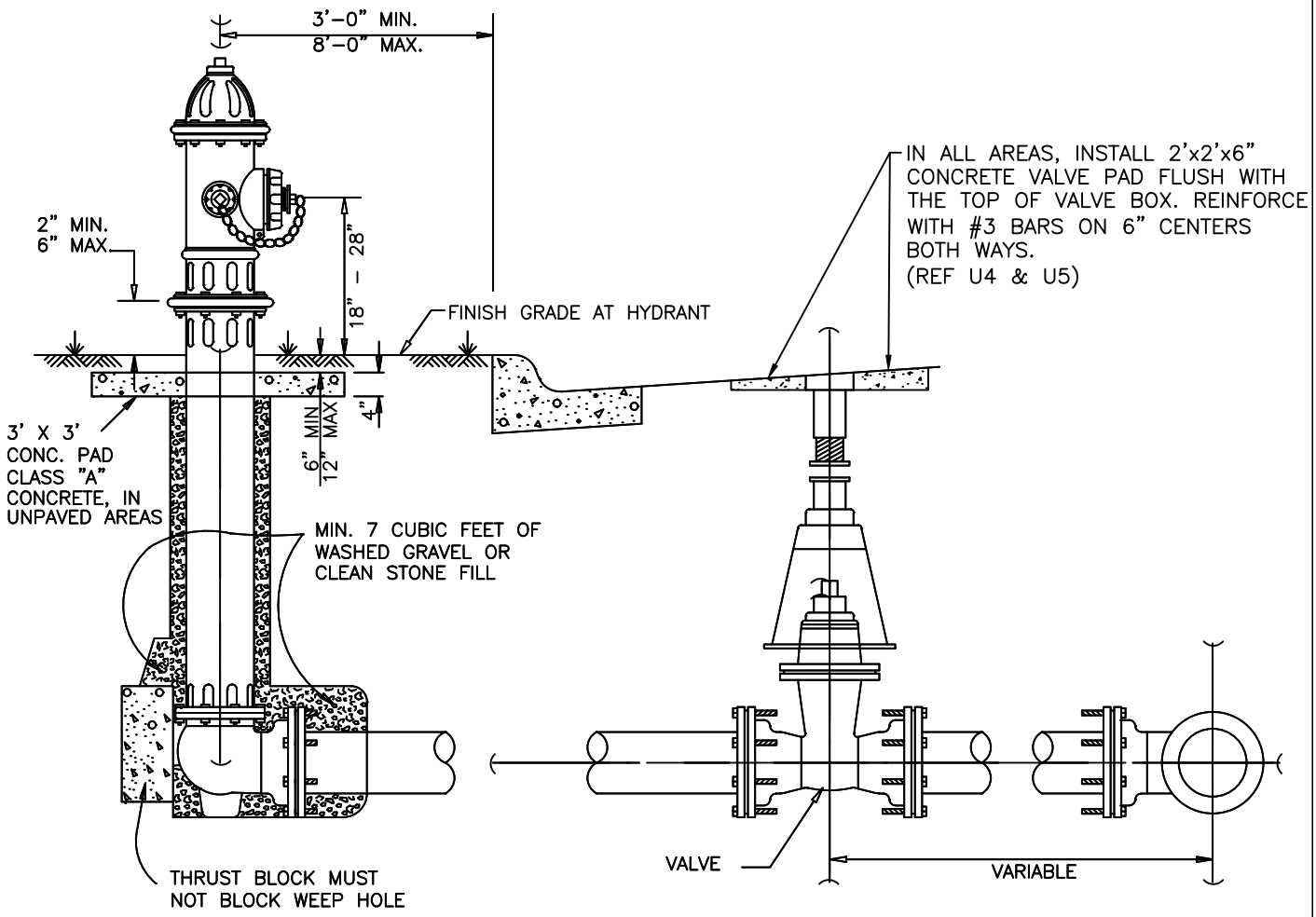

NOTES:

1. IN GENERAL, ALL FIRE HYDRANTS SHALL CONFORM TO AWWA STANDARD SPECIFICATIONS FOR FIRE HYDRANTS FOR ORDINARY WATER WORKS SERVICE, C-502. FIRE HYDRANTS SHALL HAVE A 5 1/4 " MIN. VALVE OPENING AND A BARREL APPROXIMATELY 7" INSIDE DIAMETER. ALL HYDRANTS SHALL BE EQUIPPED WITH A BREAKAWAY FLANGE.
2. ALL JOINTS SHALL BE RESTRAINED MECHANICAL JOINTS.
3. TYPICAL VALVE: ACTUAL VALVE LOCATION WILL DEPEND ON LOCATION OF WATER MAIN.
4. F.H. NO CLOSER THAN 18" TO EXISTING OR PROPOSED SIDEWALKS. (USUAL)
5. STANDARD BURY DEPTH 5' FEET
6. SET FIRE HYDRANT ON THE LOT LINE POSSIBLE.
7. F.H. SHALL BE LOCATED MINIMUM 1 FT. OUTSIDE OF THE AREA BETWEEN THE P.C.'S OF THE CORNER TURNING RADII AT INTERSECTIONS. (SEE PLAN VIEW)
8. FIRE HYDRANT SHALL BE MUELLER CENTURION, M&H MODEL 129, OR CLOW MEDALLION

7. FIRE HYDRANTS MUST MEET OR EXCEED AWWA C 502, FIELD PAINT RED.

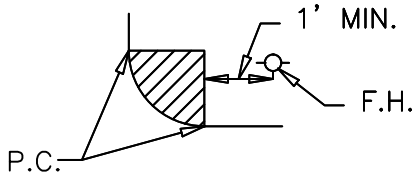

PLAN VIEW
N.T.S.

NOT TO SCALE

CITY OF WEATHERFORD	DATE 01/2016	UTILITY DEPARTMENT	SHEET. #
	DRAWN BY CITY OF WEATHERFORD	FIRE HYDRANT INSTALLATION	U3

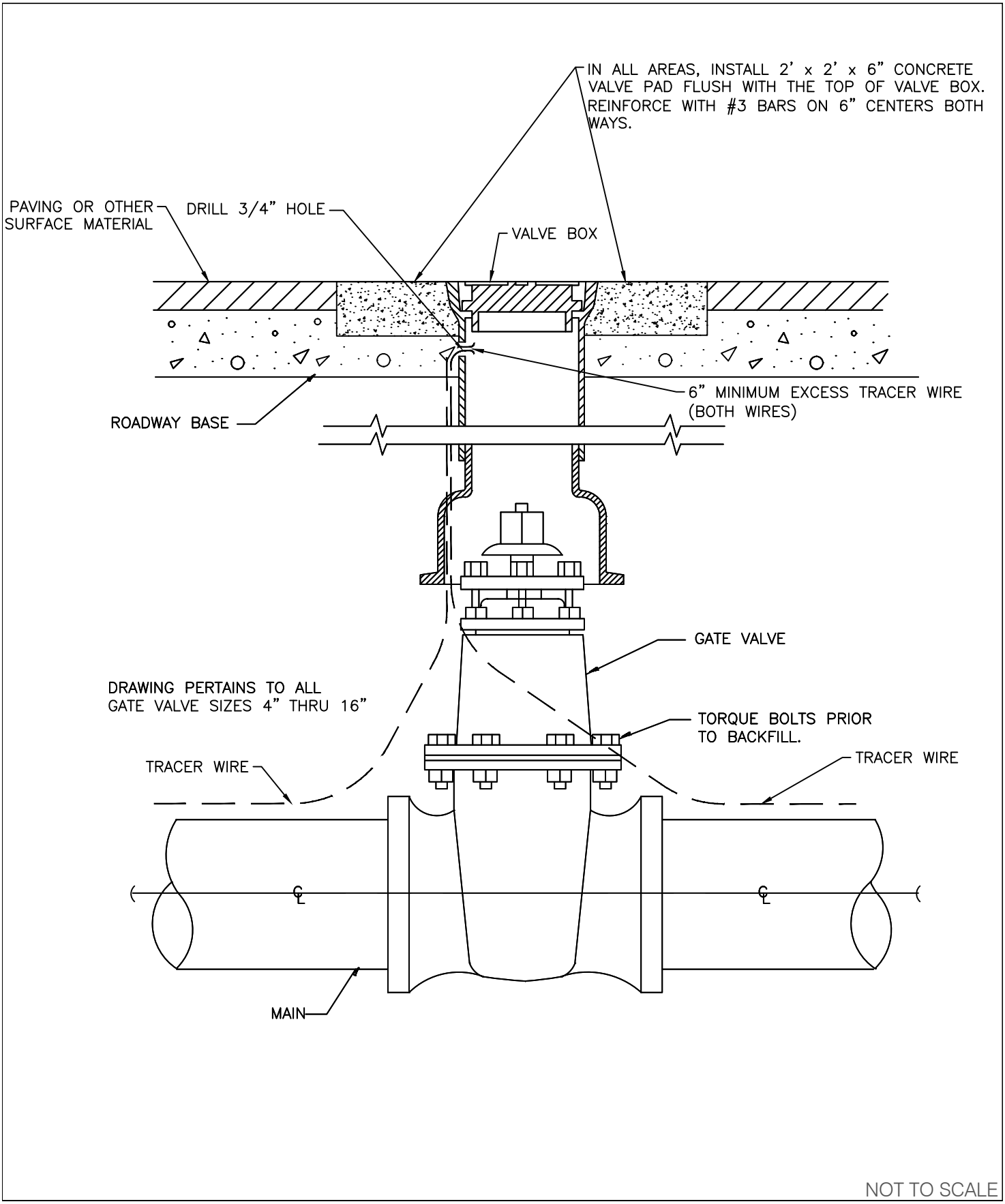

NOT TO SCALE

CITY OF WEATHERFORD	DATE 01/2016	UTILITY DEPARTMENT	SHEET. #
	DRAWN BY CITY OF WEATHERFORD	GATE VALVE BOX & EXTENSION STEM 4 FOOT OR SHALLOWER	U4

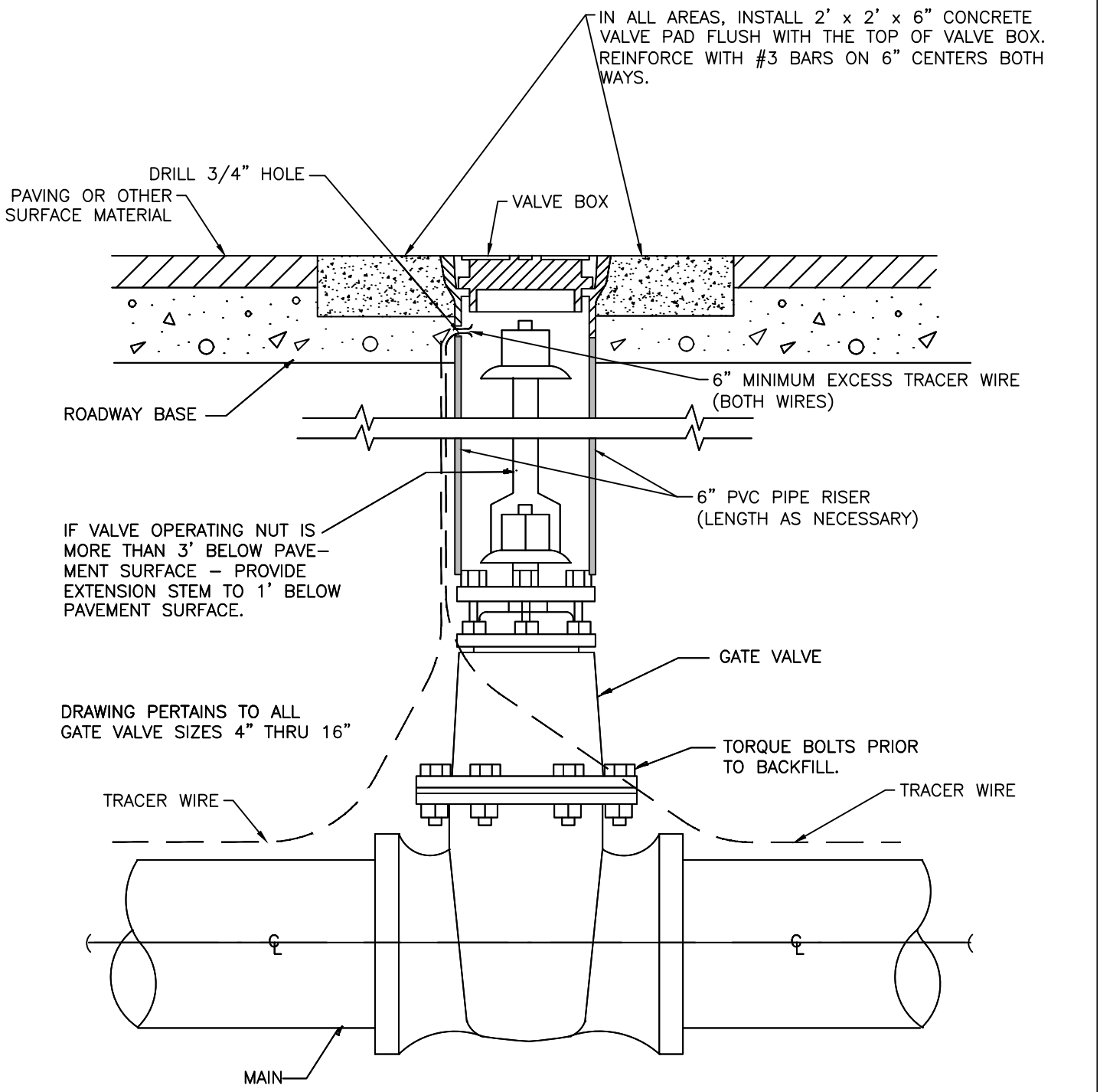

NOT TO SCALE

CITY OF WEATHERFORD	DATE 01/2016	UTILITY DEPARTMENT	SHEET. #
	DRAWN BY CITY OF WEATHERFORD	GATE VALVE BOX & EXTENSION STEM DEEPER THAN 4 FOOT	U5

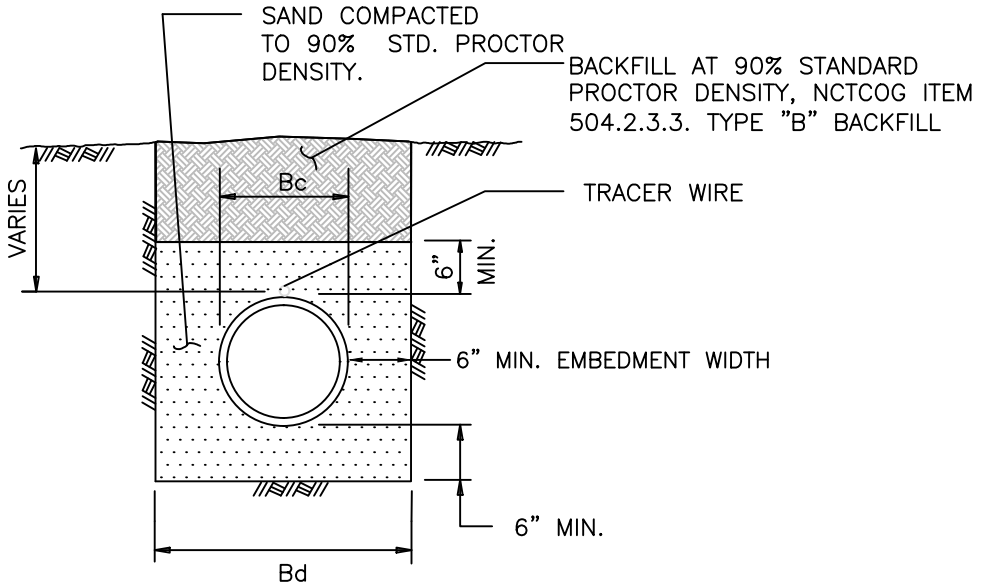

NOTES:
1. Bc = OUTSIDE DIAMETER OF PIPE
2. Bd = TRENCH WIDTH

WATER

N.T.S.

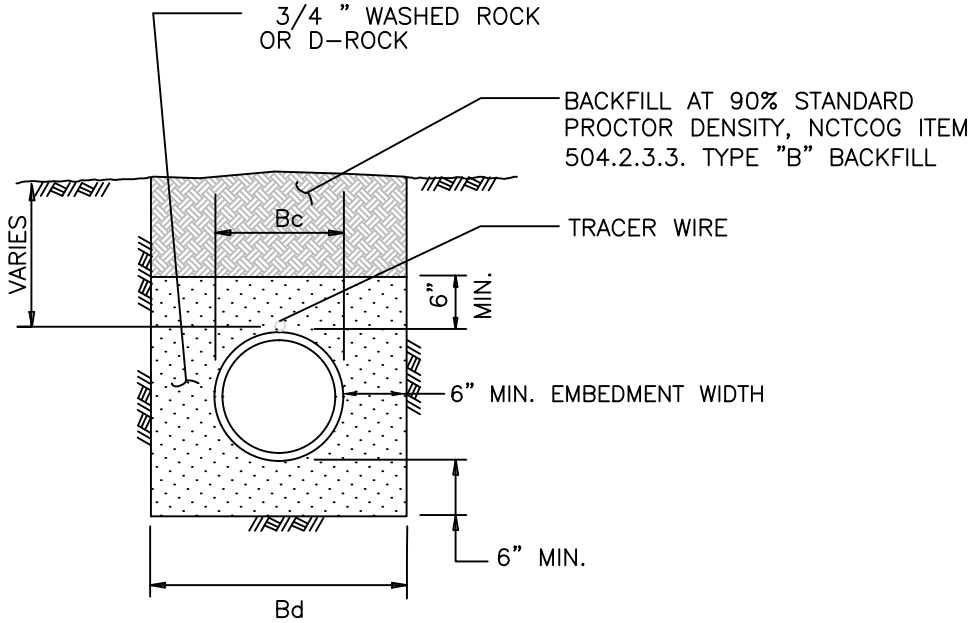

WASTEWATER

N.T.S.

NOT TO SCALE

CITY OF WEATHERFORD	DATE 01/2016	UTILITY DEPARTMENT	SHEET. #
	DRAWN BY CITY OF WEATHERFORD	TYPICAL UTILITY TRENCH SECTION NON-PAVED AREAS	U6

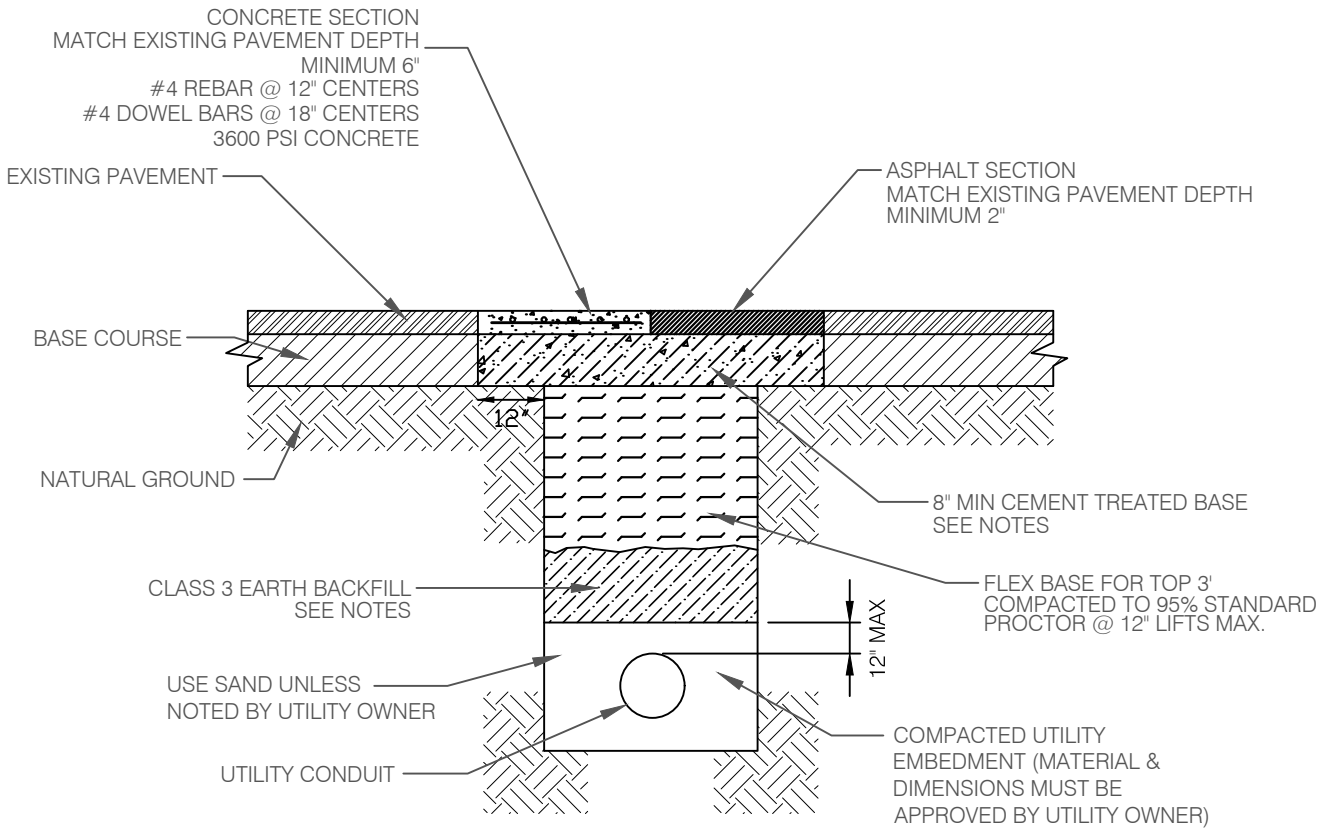

NOTES:

1. Contractor is required to obtain a R.O.W. Excavation Permit prior to excavation.
2. Traffic Control Plan shall be submitted and approved by TPW prior to any work within the right-of-way.
3. Class 3 Earth backfill shall meet the requirements of Type B backfill per N.C.T.C.O.G. section 504.2.3.3 with the exception of stone shall be less than 3 inches in diameter.
3. All material within the trench shall be mechanically compacted in lifts no more than 12" to 95% compaction per standard proctor. Compaction test report required every 200 linear feet for each lift and at crossings designated by inspector.
4. Cement Treated Base shall consist of flex base material with two sacks of cement type I/II per cubic yard mixed in a concrete mixer or transit mixed. Road mixed may be allowed subject to approval from director of TPW.
5. Temporary asphalt shall be placed over trench as soon as backfill is placed.
6. Pavement repairs shall be performed by City forces or City approved contractor. Pavement repairs for non-utility repairs and/or major utility projects shall be contractors responsibility, or as determined by TPW director. A monetary deposit for pavement repairs will be required at time of permitting. A two year maintenance bond may be required for major pavement improvements.
7. Asphalt pavement repair shall be saw cut 2" from edge of pavement. Final concrete repair shall be to closest pavement joint and/or section of panel. All final pavement repair layout shall be approved by TPW Director or representative.
8. Asphalt and Concrete shall be per City specifications and N.C.T.C.O.G. Public Works Construction Standards and Specifications.

NOT TO SCALE

CITY OF WEATHERFORD	DATE 01/2016	UTILITY DEPARTMENT	SHEET. #
	DRAWN BY CITY OF WEATHERFORD	TYPICAL UTILITY TRENCH SECTION PAVED AREAS	U7

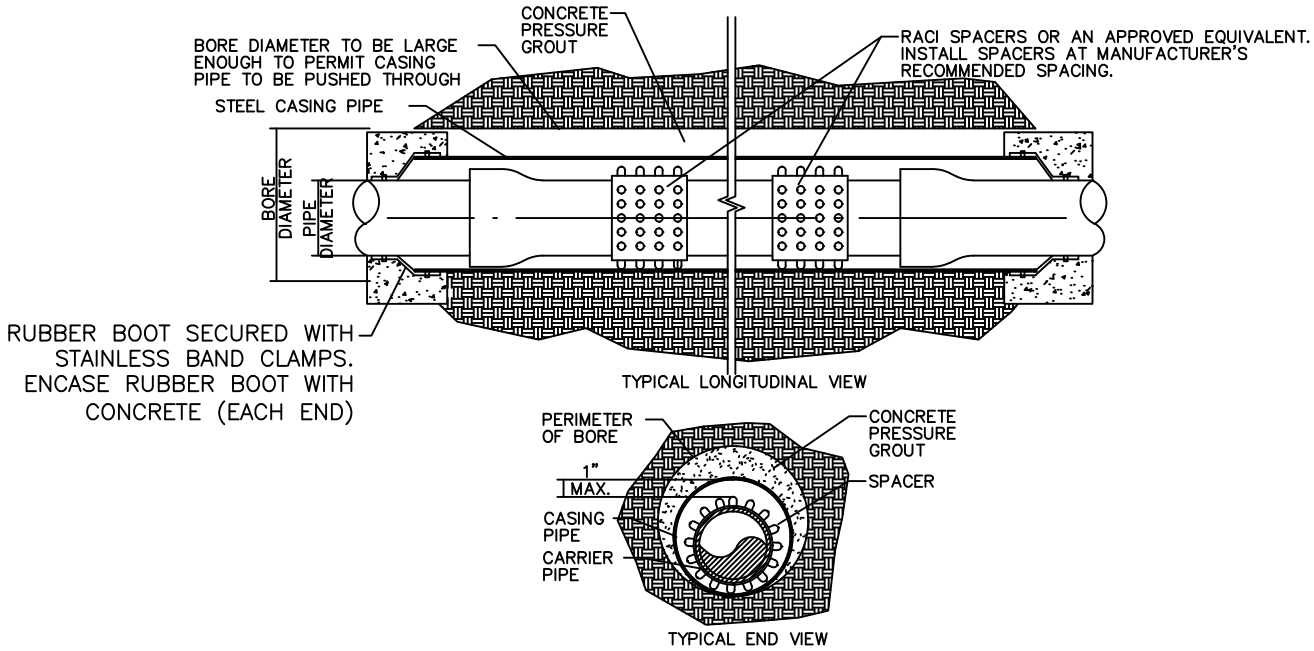

BORE AND CASING DETAIL FOR ROAD AND RAILROAD CROSSINGS
N.T.S.

1. CARRIER PIPE COMPRESSION TYPE JOINTS TO BE USE IF POSSIBLE.
2. IF COMPRESSION TYPE JOINT IS NOT AVAILABLE FOR CARRIER PIPE, RESTRAINED MJ TYPE SHALL BE USED AND JOINTS BOLTED BEFORE PULLING PIPE INTO PLACE.
3. MINIMUM WALL THICKNESS OF 36" AND LARGER CASING SHALL BE 0.50".
4. PIPE SHALL BE COATED AND LINED IN ACCORDANCE WITH AWWA C-210 OR APPROVED EQUAL.
5. ALL CASING JOINTS JOINTS SHALL BE WELDED IN ACCORDANCE WITH AWWA C-206. AFTER PIPE IS WELDED, COATING AND LINING SHALL BE REPAIRED.
6. CASING PRODUCT SHALL BE FROM A MANUFACTURER THAT HAS NOT LESS THAN FIVE(5) YEARS SUCCESSFUL EXPERIENCE MANUFACTURING PIPE IN THE UNITED STATES OF PARTICULAR TYPE AND SIZE. ALL PIPE MANUFACTURING INCLUDING CYLINDER PRODUCTION, LINING, COATING AND FITTINGS SHALL BE PRODUCED BY ONE MANUFACTURER. THE PIPE MANUFACTURER MUST HAVE A CERTIFIED QUALITY ASSURANCE PROGRAM. THE CERTIFIED PROGRAM SHALL BE ISO 9001: 2000 OR OTHER EQUIVALENT NATIONALLY RECOGNIZED PROGRAM.

STEEL CASING WALL THICKNESS	
DIA OF CASING PIPE	MIN THICKNESS
12" OR LESS	0.25"
12"-18"	0.3125"
18"-22"	0.3750"
22"-28"	0.4375"
CASING PIPES SHALL BE SMOOTH STEEL PIPES WITH A MIN YIELD STRENGTH OF 35,000 PSI.	

For lines crossing State highways or roads, crossing intersecting streets/county roads, or passing through the protected root area of desirable trees, is it clearly shown in description and on ALL plans that the line will be installed by conventional dry auger boring unless otherwise approved by a TxDOT engineer or Inspector? In addition, casing should be shown under highways and paved city street/county road intersections.

NOT TO SCALE

CITY OF WEATHERFORD	DATE 01/2016	UTILITY DEPARTMENT	SHEET. #
	DRAWN BY CITY OF WEATHERFORD	BORE & CASING DETAIL	U8

GENERAL NOTES FOR ALL THRUST BLOCKS:

1. CONCRETE FOR BLOCKING SHALL BE CLASS "B".
2. ALL CALCULATIONS ARE BASED ON INTERNAL PRESSURE OF 200 PSI FOR DUCTILE IRON, P.V.C., AND 150 PSI FOR CONCRETE PIPE. IF PRESSURES EXCEEDED, RECALCULATE FOR THRUST BLOCKING DIMENSIONS.
3. VOLUMES OF THRUST BLOCKS ARE NET VOLUMES OF CONCRETE TO BE FURNISHED. THE CORRESPONDING WEIGHT OF THE CONCRETE (CLASS "B") IS EQUAL TO OR GREATER THAN THE VERTICAL COMPONENT OF THE THRUST ON THE VERTICAL BEND.
4. WALL THICKNESS (T) ASSUMED HERE FOR ESTIMATING PURPOSES ONLY.
5. POUR CONCRETE FOR BLOCK AGAINST UNDISTURBED EARTH.
6. DIMENSIONS MAY BE VARIED AS REQUIRED BY FIELD CONDITIONS WHERE AND AS DIRECTED BY THE ENGINEER. THE VOLUME OF CONCRETE BLOCKING SHALL NOT BE LESS THAN SHOWN HERE.
7. THE SOIL BEARING PRESSURES ARE BASED ON 1000 LBS./S.F. IN SOIL AND 2000 LBS./S.F. IN ROCK.
8. USE POLYETHYLENE WRAP OR EQUAL BETWEEN CONCRETE AND BEND, TEE, OR PLUG TO PREVENT THE CONCRETE FROM STICKING TO IT.
9. CONCRETE SHALL NOT EXTEND BEYOND JOINTS.
10. ALL FITTINGS THAT REQUIRE THRUST BLOCKING SHALL ALSO INCLUDE MECHANICAL JOINT RESTRAINTS, EBBA IRON SERIES 2000 PV.

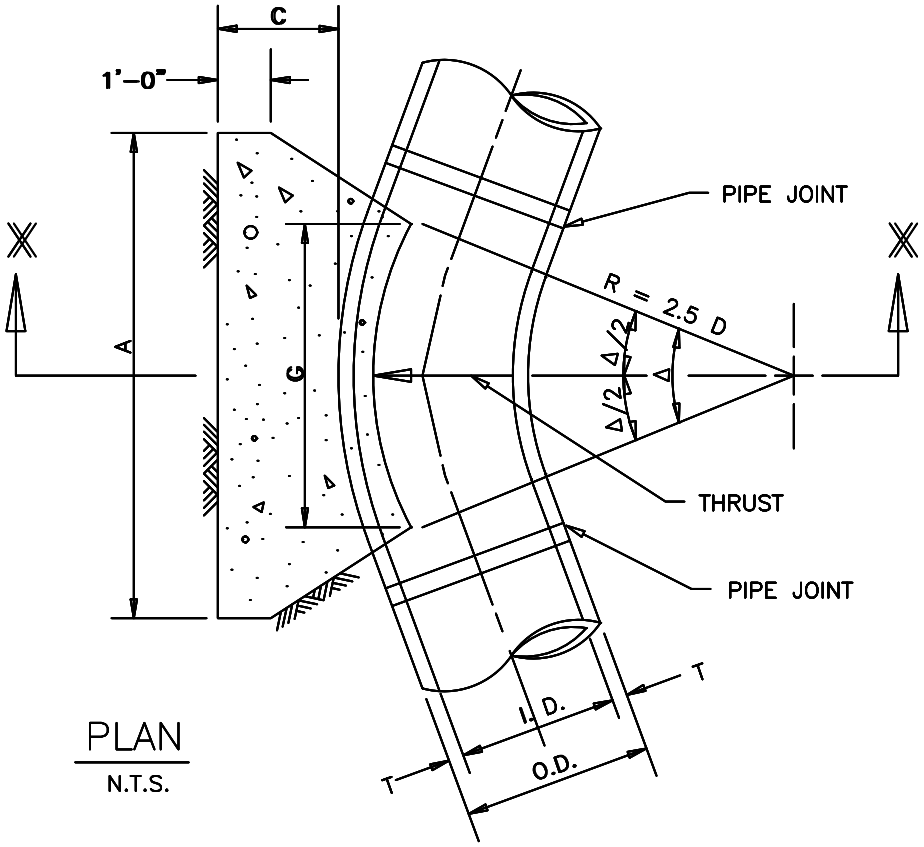

PLAN

N.T.S.

REFER TO U9
FOR GENERAL NOTES.

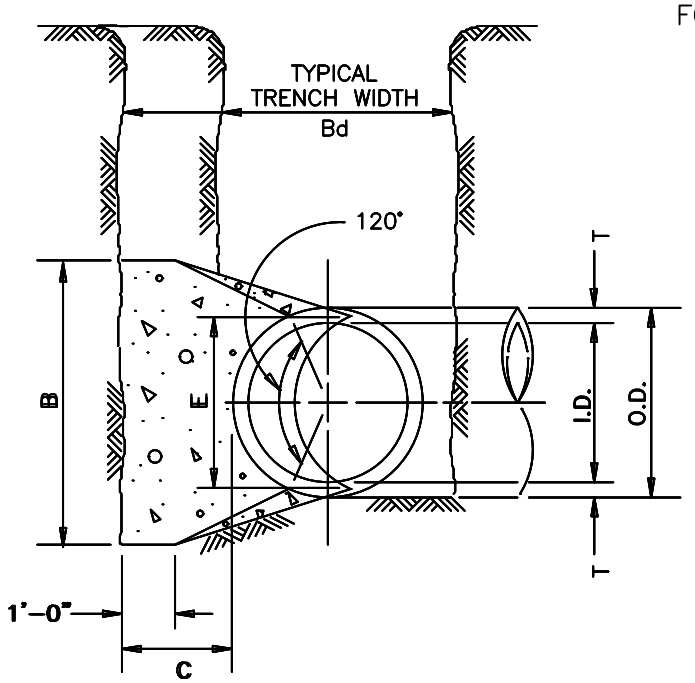

SECTION X-X

N.T.S.

NOT TO SCALE

CITY OF WEATHERFORD	DATE 01/2016	UTILITY DEPARTMENT	SHEET. #
	DRAWN BY CITY OF WEATHERFORD	HORIZONTAL THRUST BLOCK AT PIPE BEND	U10

I.D. (IN.)	Δ = 30°								I.D. (IN.)	Δ = 45°							
			EARTH			ROCK						EARTH			ROCK		
	G (FT.)	THRUST (TONS)	A (FT.)	B (FT.)	VOL. (C.Y.)	A (FT.)	B (FT.)	VOL. (C.Y.)		G (FT.)	THRUST (TONS)	A (FT.)	B (FT.)	VOL. (C.Y.)	A (FT.)	B (FT.)	VOL. (C.Y.)
4,6,8	1.0	2.6	2.0	1.5	0.2	1.0	1.5	0.1	4,6,8	1.5	3.9	2.0	2.0	0.2	1.5	1.5	0.1
10,12	1.5	5.9	2.5	2.5	0.3	2.0	1.5	0.2	10,12	2.2	8.7	3.5	2.5	0.5	2.0	2.5	0.3
16,18	2.2	13.2	3.5	4.0	0.8	2.5	3.0	0.4	16,18	3.2	19.5	4.5	4.5	1.2	3.0	3.5	0.6
20	2.4	16.3	4.5	4.0	1.0	3.0	3.0	0.5	20	3.6	24.1	5.5	4.5	1.5	3.5	3.5	0.7
24	2.9	23.4	6.0	4.0	1.4	3.5	3.5	0.7	24	4.3	34.6	8.0	4.5	2.3	4.5	4.0	1.1
30	3.6	27.5	6.5	5.0	1.9	3.5	4.0	0.9	30	5.4	40.6	8.5	5.0	3.2	5.5	4.0	1.6
36	4.4	39.5	7.0	6.0	3.4	4.5	4.5	1.6	36	6.5	58.5	10.0	6.0	5.3	6.5	4.5	2.6
42	5.1	53.8	8.0	7.0	5.1	5.5	5.0	2.5	42	7.5	79.6	11.5	7.0	8.1	8.0	5.0	4.2
48	5.8	70.3	9.0	8.0	7.4	6.0	6.0	3.7	48	8.6	104.0	13.0	8.0	11.9	9.0	6.0	6.3
54	6.5	89.0	10.0	9.0	10.3	7.0	6.5	5.3	54	9.7	131.5	15.0	9.0	17.1	10.5	6.5	8.9
60	7.3	110.0	11.0	10.0	13.9	7.5	7.5	7.3	60	10.7	162.4	16.5	10.0	23.1	11.0	7.5	12.0
66	8.0	132.9	12.5	11.0	18.9	8.5	8.0	9.6	66	11.8	196.5	18.0	11.0	30.1	12.0	8.5	16.2
72	8.7	158.2	13.5	12.0	24.0	9.0	9.0	12.3	72	12.9	233.9	19.5	12.0	38.6	14.0	8.5	20.7
78	9.4	185.6	14.5	13.0	30.0	10.0	9.5	15.6	78	13.9	274.5	21.5	13.0	49.8	14.5	9.5	25.9
84	10.1	215.3	15.5	14.0	37.1	10.5	10.5	19.5	84	15.0	318.4	23.0	14.0	61.2	15.5	10.5	32.6
90	10.9	247.1	16.5	15.0	45.0	11.5	11.0	23.9	90	16.1	365.5	24.5	15.0	74.5	17.5	10.5	39.6
96	11.6	281.2	18.0	16.0	55.5	12.5	11.5	28.9	96	17.1	415.6	26.0	16.0	89.5	18.5	11.5	48.5

I.D. (IN.)	Δ = 67.50°								I.D. (IN.)	Δ = 90°							
			EARTH			ROCK						EARTH			ROCK		
	G (FT.)	THRUST (TONS)	A (FT.)	B (FT.)	VOL. (C.Y.)	A (FT.)	B (FT.)	VOL. (C.Y.)		G (FT.)	THRUST (TONS)	A (FT.)	B (FT.)	VOL. (C.Y.)	A (FT.)	B (FT.)	VOL. (C.Y.)
4,6,8	2.1	5.6	3.0	2.0	0.3	2.0	1.5	0.2	4,6,8	2.7	7.1	5.0	1.5	0.4	2.0	2.0	0.2
10,12	3.1	12.6	5.5	2.5	0.8	3.5	2.0	0.4	10,12	4.0	16.0	6.5	2.5	1.0	3.5	2.5	0.5
16,18	4.7	28.3	7.5	4.0	1.9	5.5	3.0	0.9	16,18	6.0	36.0	9.0	4.0	2.4	4.5	4.0	1.0
20	5.2	34.9	9.0	4.0	2.3	5.5	3.5	1.2	20	6.6	44.4	10.0	4.5	3.1	6.0	4.0	1.5
24	6.2	50.3	11.5	4.5	3.5	6.5	4.0	1.6	24	7.9	64.0	14.5	4.5	5.0	8.0	4.0	2.1
30	7.8	58.9	12.0	5.0	4.8	7.5	4.0	2.2	30	9.9	75.0	15.0	5.0	6.7	10.0	4.0	3.3
36	9.4	84.9	14.5	6.0	8.2	9.5	4.5	3.8	36	11.9	108.0	18.0	6.0	11.4	12.0	4.5	5.3
42	10.9	115.5	17.0	7.0	12.8	11.0	5.5	6.3	42	13.9	147.0	21.0	7.0	17.8	14.0	5.5	8.7
48	12.5	150.9	19.0	8.0	18.4	13.0	6.0	9.2	48	15.9	192.0	24.0	8.0	26.2	16.0	6.0	12.4
54	14.0	191.0	21.5	9.0	26.0	15.0	6.5	12.9	54	17.9	243.0	27.0	9.0	36.9	18.0	7.0	18.1
60	15.6	235.8	24.0	10.0	35.6	16.0	7.5	17.6	60	19.9	299.8	30.0	10.0	50.3	20.0	7.5	24.0
66	17.1	285.3	26.0	11.0	46.0	18.0	8.0	23.0	66	21.8	362.8	33.0	11.0	66.2	22.0	8.5	32.5
72	18.7	339.5	28.5	12.0	57.8	19.0	9.0	28.4	72	23.8	431.8	36.0	12.0	85.6	24.0	9.0	41.0
78	20.2	398.5	31.0	13.0	75.7	21.0	9.5	37.4	78	25.7	506.7	39.0	13.0	108.2	26.0	10.0	53.2
84	21.8	462.1	33.5	14.0	94.7	22.0	10.5	46.5	84	27.7	587.7	42.0	14.0	134.4	28.0	10.5	64.8
90	23.3	530.5	35.5	15.0	114.4	24.5	11.0	58.2	90	29.0	674.6	45.0	15.0	164.9	30.0	11.5	81.2
96	24.9	603.6	38.0	16.0	138.9	25.5	12.0	70.0	96	31.6	767.5	48.0	16.0	199.0	32.0	12.0	95.1

TABLES OF DIMENSIONS AND QUANTITIES

I.D. (IN.)	T (IN.)	Δ = 11.25° (FT.)	Δ ≥ 22.50° (FT.)	E (FT.)
4,6,8	0.4	1.5	1.5	0.9
10,12	0.5	1.5	1.5	1.2
16,18	0.6	1.5	1.5	1.6
20	0.7	1.5	1.5	1.8
24	0.9	1.5	1.5	2.1
30	2.9	1.5	1.9	2.6
36	4.5	1.5	2.3	3.3
42	5.0	1.8	2.6	3.8
48	5.5	2.0	3.0	4.3
54	6.0	2.3	3.4	4.8
60	6.5	2.5	3.8	5.3
66	6.8	2.8	4.1	5.7
72	7.5	3.0	4.5	6.3
78	7.5	3.3	4.9	6.7
84	8.0	3.5	5.3	7.2
90	8.5	3.8	5.6	7.7
96	9.0	4.0	6.0	8.2

I.D. (IN.)	Δ = 11.25°								I.D. (IN.)	Δ = 22.5°							
	G (FT.)	THRUST (TONS)	EARTH			ROCK				G (FT.)	THRUST (TONS)	EARTH			ROCK		
			A (FT.)	B (FT.)	VOL. (C.Y.)	A (FT.)	B (FT.)	VOL. (C.Y.)				A (FT.)	B (FT.)	VOL. (C.Y.)	A (FT.)	B (FT.)	VOL. (C.Y.)
4,6,8	0.4	1.0	1.0	1.5	0.1	1.0	1.0	0.1	4,6,8	0.8	2.0	1.5	1.5	0.1	1.0	1.0	0.1
10,12	0.6	2.2	1.5	1.5	0.1	1.0	1.5	0.1	10,12	1.1	4.4	2.0	2.5	0.3	1.5	1.5	0.1
16,18	0.8	5.0	2.0	2.5	0.3	1.5	2.0	0.2	16,18	1.6	9.9	3.0	3.5	0.6	2.0	2.5	0.3
20	0.9	6.2	2.0	3.5	0.4	1.5	3.0	0.3	20	1.8	12.3	3.5	3.5	0.7	2.0	3.0	0.4
24	1.1	8.9	3.0	3.5	0.5	1.5	3.0	0.3	24	2.2	17.7	4.0	4.5	1.0	3.0	3.5	0.5
30	1.4	10.4	3.0	3.5	0.6	2.0	3.5	0.4	30	2.7	20.7	5.0	4.5	1.5	3.0	4.0	0.8
36	1.7	15.0	3.5	4.5	0.9	2.0	4.0	0.5	36	3.3	29.8	5.5	5.5	2.3	4.0	4.0	1.3
42	1.9	20.4	4.5	5.0	1.5	2.5	5.0	0.8	42	3.8	40.5	7.0	6.0	3.9	4.5	5.0	2.1
48	2.2	26.6	4.5	6.0	2.0	2.5	6.0	1.1	48	4.4	52.9	8.0	7.0	5.7	4.5	6.0	2.8
54	2.5	33.7	6.0	6.0	3.0	3.0	6.0	1.4	54	4.9	67.0	9.0	8.0	8.0	6.0	6.0	4.1
60	2.7	41.6	6.0	7.0	3.8	3.0	7.0	1.8	60	5.5	82.7	9.5	9.0	10.6	6.0	7.0	5.3
66	3.0	50.3	6.5	8.0	5.1	3.5	8.0	2.7	66	6.0	100.1	10.5	10.0	14.1	6.5	8.0	7.2
72	3.3	59.9	7.5	8.0	6.3	4.0	8.0	3.3	72	6.6	119.1	11.0	11.0	17.6	7.5	8.0	9.1
78	3.6	70.2	8.0	9.0	8.1	4.0	9.0	3.9	78	7.1	139.8	12.0	12.0	22.5	8.0	9.0	11.7
84	3.8	81.5	8.5	10.0	10.3	4.5	10.0	5.3	84	7.6	162.1	13.0	12.5	27.2	8.5	10.0	14.8
90	4.1	93.5	9.5	10.0	12.2	5.0	10.0	6.3	90	8.2	186.1	14.0	13.5	33.7	9.5	10.0	17.7
96	4.4	106.4	10.0	11.0	15.0	5.0	11.0	7.4	96	8.7	211.7	15.0	14.5	41.2	10.0	11.0	21.8

TABLES OF DIMENSIONS AND QUANTITIES

CITY OF WEATHERFORD	DATE 01/2016	UTILITY DEPARTMENT	SHEET. #
	DRAWN BY CITY OF WEATHERFORD	HORIZONTAL THRUST BLOCK AT PIPE BEND - TABLES 2	U12

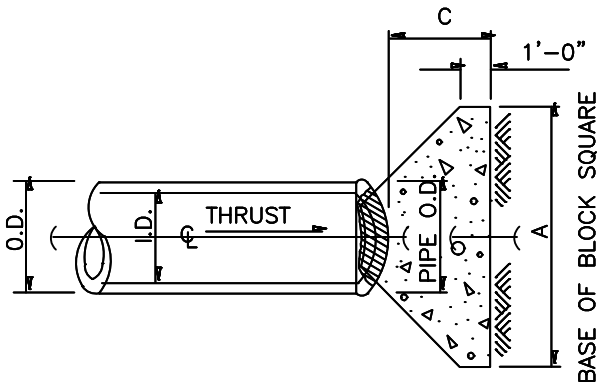

PLAN OF PLUG THRUST BLOCK

N.T.S.

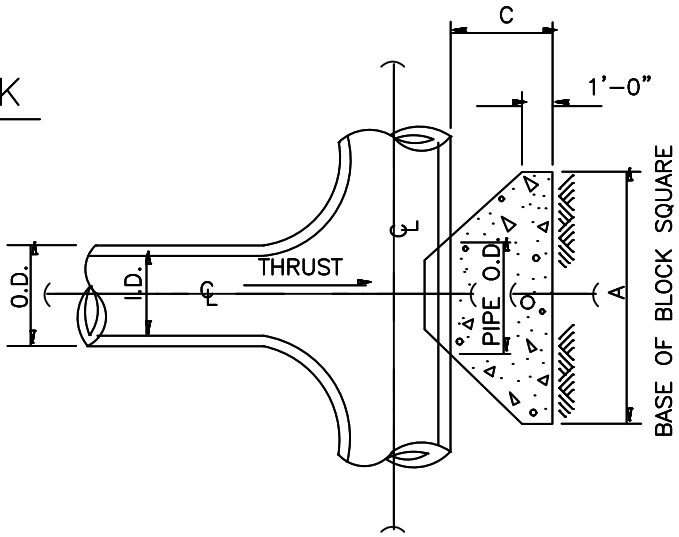

REFER TO U9
FOR GENERAL NOTES.

PLAN OF TEE THRUST BLOCK

N.T.S.

			EARTH		ROCK	
I.D. (IN.)	THRUST (TONS)	C (FT.)	A (FT.)	VOL. (C.Y.)	A (FT.)	VOL. (C.Y.)
4,6,8	5.1	1.5	2.5	0.3	2.0	0.2
10,12	11.3	1.5	3.5	0.6	2.5	0.3
16,18	25.5	2.0	5.5	1.6	4.0	0.9
20	31.5	2.0	6.0	1.9	4.0	0.9
24	45.2	2.5	7.0	3.1	5.0	1.7
30	53.0	3.0	7.5	4.1	5.5	2.4
36	76.3	4.0	9.0	7.3	6.5	4.2
42	104.0	4.5	10.5	11.0	7.5	6.2
48	136.0	5.0	12.0	15.6	8.5	8.7
54	172.0	5.5	13.5	21.4	9.5	11.9
60	212.0	6.0	15.0	28.4	10.5	15.7
66	257.0	6.5	16.5	36.8	11.5	20.5
72	305.0	7.5	17.5	47.2	12.5	27.2
78	358.0	8.0	19.0	58.9	13.5	33.7
84	416.0	8.5	20.5	72.3	14.5	41.2
90	477.0	9.0	22.0	87.7	15.5	49.7
96	543.0	9.5	23.5	104.8	16.5	61.0

NOT TO SCALE

CITY OF WEATHERFORD	DATE 01/2016	UTILITY DEPARTMENT	SHEET. #
	DRAWN BY CITY OF WEATHERFORD	HORIZONTAL THRUST BLOCK AT TEES & PLUGS	U13

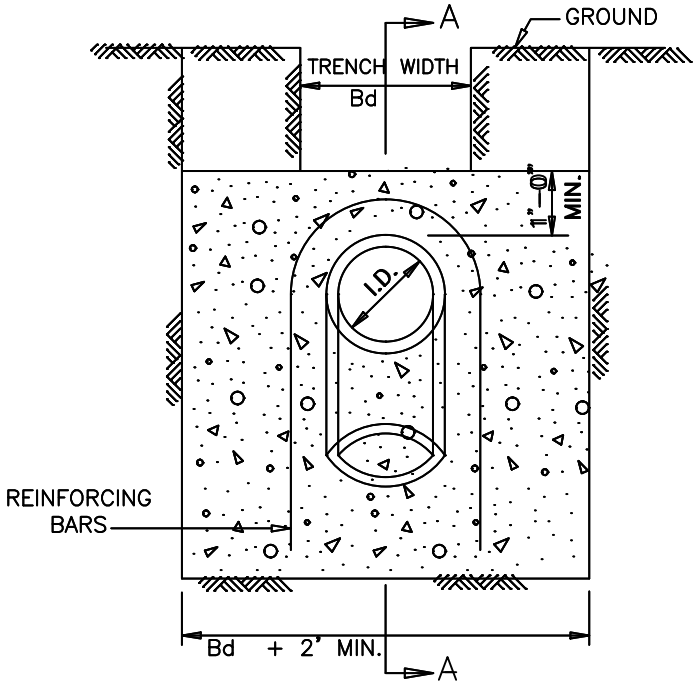

ELEVATION "B–B"

N.T.S.

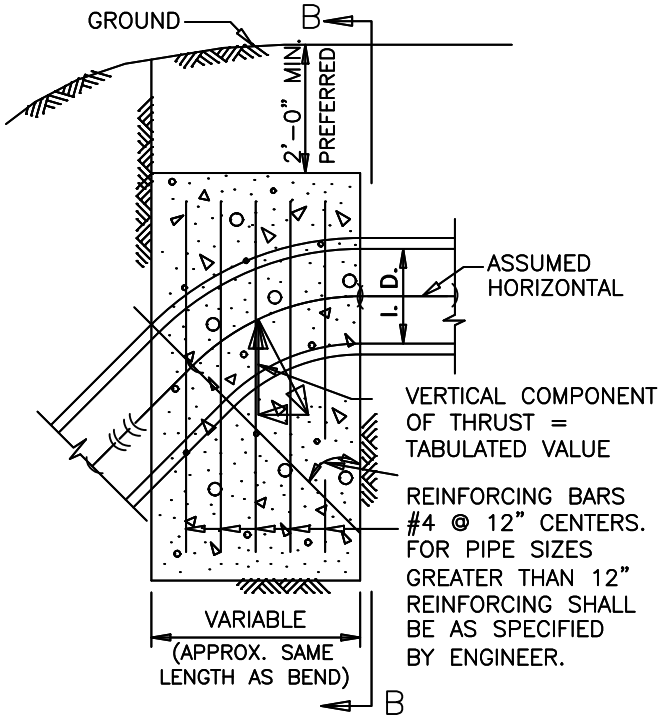

SECTION "A–A"

N.T.S.

REFER TO U9
FOR GENERAL NOTES.

Δ →	11.25°		22.5°		30°		45°		67.5°		90°		← Δ
I.D. (IN.)	THRUST (TONS)	VOL. (C.Y.)	THRUST (TONS)	VOL. (C.Y.)	THRUST (TONS)	VOL. (C.Y.)	THRUST (TONS)	VOL. (C.Y.)	THRUST (TONS)	VOL. (C.Y.)	THRUST (TONS)	VOL. (C.Y.)	I.D. (IN.)
4,6,8	1.0	0.5	2.0	1.0	2.5	1.3	3.6	1.8	4.6	2.3	5.0	2.5	4,6,8
10,12	2.2	1.1	4.3	2.2	5.7	2.8	8.0	4.0	10.5	5.2	11.3	5.7	10,12
16,18	5.0	2.5	9.7	4.9	12.7	6.4	18.0	9.0	23.5	11.8	25.5	12.7	16,18
20	6.1	3.1	12.0	6.0	15.7	7.9	22.2	11.1	29.2	14.5	31.4	15.7	20
24	8.2	4.4	17.3	8.7	22.6	11.3	32.0	16.0	41.8	20.9	45.2	22.6	24
30	10.5	5.2	20.3	10.1	26.5	13.3	37.5	18.8	49.0	24.5	53.1	26.5	30
36	14.9	7.5	29.2	14.6	38.2	19.1	54.0	27.0	70.5	35.3	76.4	38.2	36
42	20.3	10.1	39.8	19.9	52.0	26.0	73.5	36.7	96.0	48.0	104.0	52.0	42
48	26.5	13.2	51.9	26.0	67.9	33.9	96.0	48.0	126.0	62.7	136.0	67.9	48
54	33.5	16.8	65.7	32.9	85.9	42.9	122.0	60.7	159.0	79.4	172.0	85.9	54
60	41.4	20.7	81.2	40.6	106.0	53.0	150.0	75.0	196.0	98.0	212.0	106.0	60
66	50.1	25.0	98.2	49.1	128.0	64.2	182.0	90.7	237.0	119.0	257.0	128.0	66
72	59.6	29.8	117.0	58.4	153.0	76.3	216.0	108.0	282.0	141.0	305.0	153.0	72
78	69.9	35.0	137.0	68.6	179.0	90.0	254.0	127.0	331.0	166.0	358.0	179.0	78
84	81.1	40.5	159.0	79.5	208.0	104.0	294.0	147.0	384.0	192.0	416.0	208.0	84
90	93.1	46.5	183.0	91.3	239.0	119.0	337.0	169.0	441.0	221.0	477.0	239.0	90
96	106.0	53.0	208.0	104.0	272.0	136.0	384.0	192.0	502.0	251.0	543.0	272.0	96

NOT TO SCALE

CITY OF WEATHERFORD	DATE 01/2016	UTILITY DEPARTMENT	SHEET. #
	DRAWN BY CITY OF WEATHERFORD	VERTICAL THRUST BLOCK AT PIPE BEND	U14

NOTES:

1. FIRST MAIN LINE JOINT TO BE A MIN. OF 5' LONG WITH 1' CONC. CRADLE (FROM SAME POUR AS BASE).
2. SEAL ALL JOINTS AND PENETRATIONS WITH NON-SHRINK GROUT.

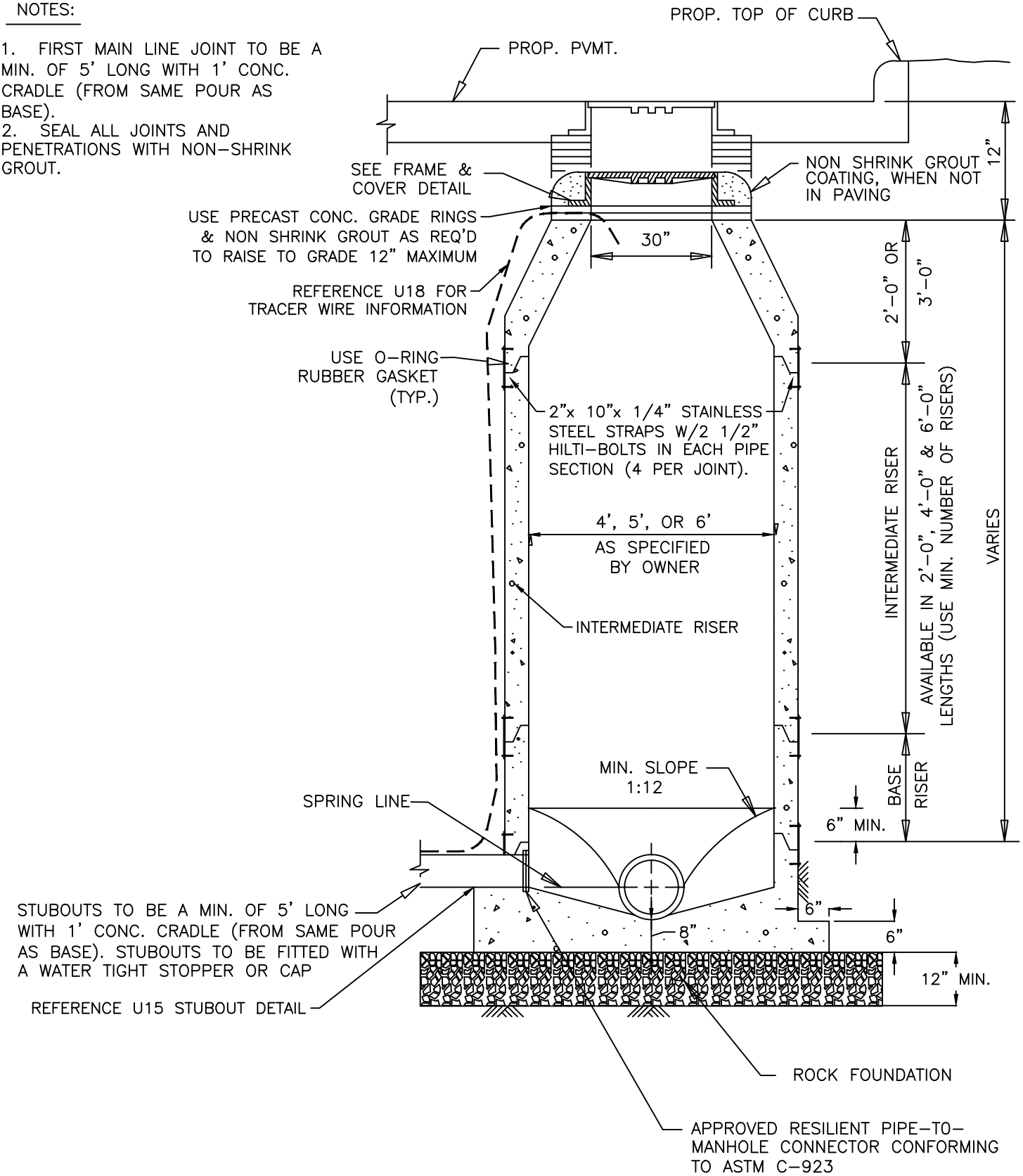

NOT TO SCALE

CITY OF WEATHERFORD	DATE 01/2016	UTILITY DEPARTMENT	SHEET. #
	DRAWN BY CITY OF WEATHERFORD	WASTEWATER MANHOLE PRECAST	U15

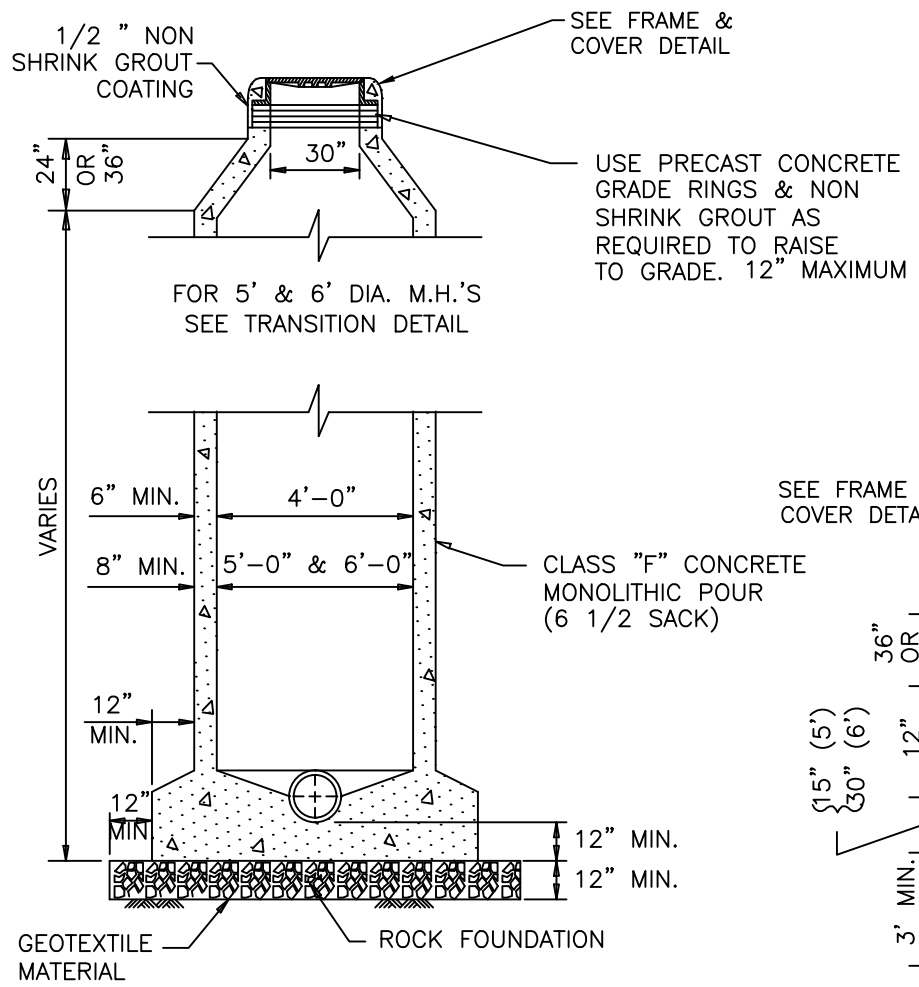

NOTES

1. WHERE M.H.'S ARE IN "PROPOSED" PAVING, FRAME & COVER SHALL BE SET 6" BELOW THE PROPOSED PAVEMENT GRADE.

NOTE:

TRACER WIRE - - - - -

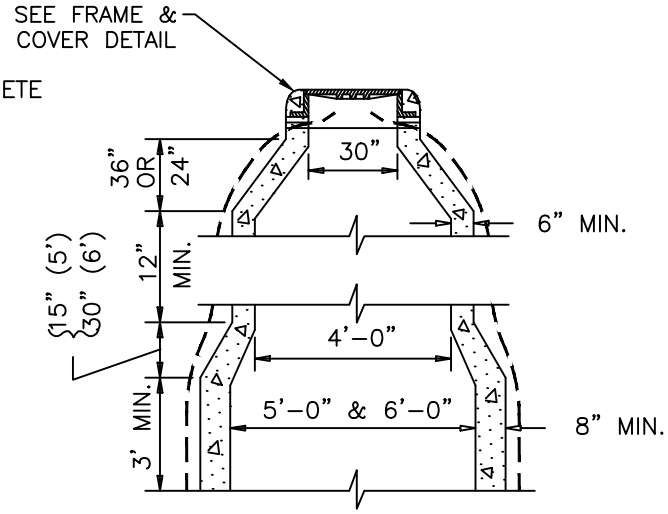

TRANSITION DETAIL FOR 5' & 6' DIA. M.H.'S

N.T.S.

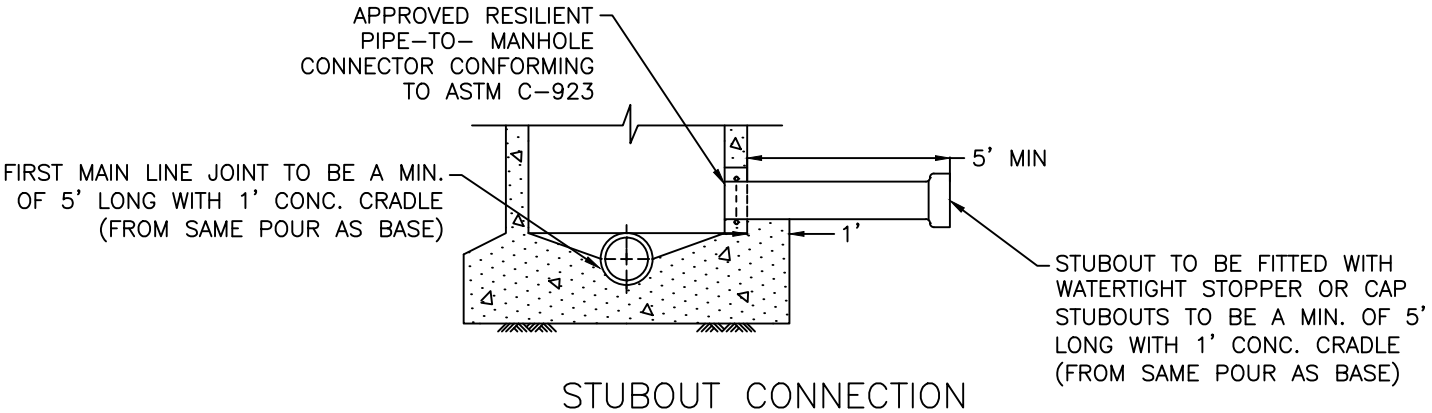

STUBOUT CONNECTION

N.T.S.

NOT TO SCALE

CITY OF WEATHERFORD	DATE 01/2016	UTILITY DEPARTMENT	SHEET. #
	DRAWN BY CITY OF WEATHERFORD	WASTEWATER MANHOLE CAST IN PLACE	U16

NOTE:
MANHOLE PAD SHALL BE SLOPED TO PROVIDE ADEQUATE DRAINAGE AWAY FROM MANHOLE COVER.

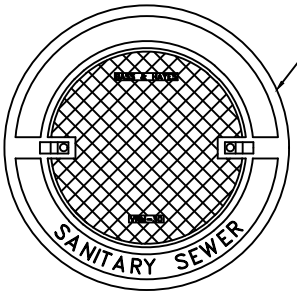

MANHOLE COVER

N.T.S.

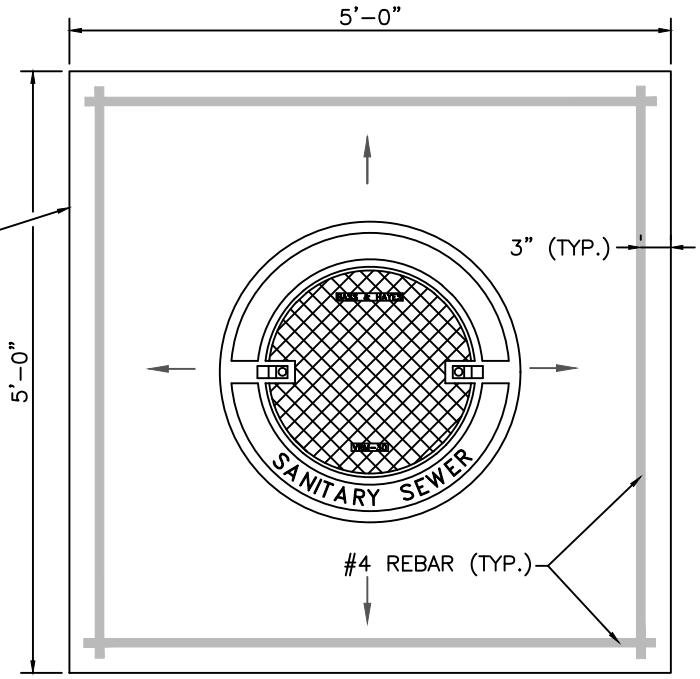

MANHOLE PAD FOR ALL MANHOLES

N.T.S.

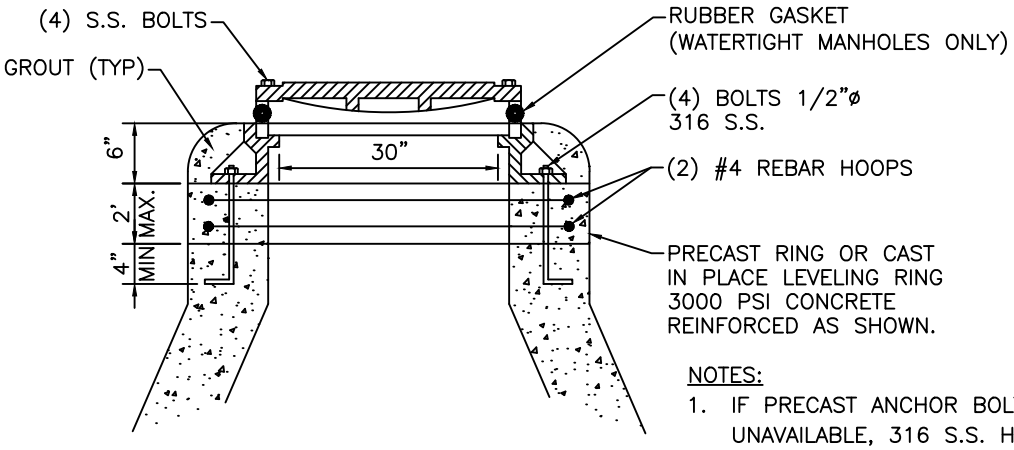

NOTES:

1. IF PRECAST ANCHOR BOLTS ARE UNAVAILABLE, 316 S.S. HILTI EPOXY TYPE ANCHOR BOLTS OF SIMILAR SIZE AND STRENGTH WILL BE ALLOWED.
2. FOR UNEVEN SLOPES LESS THAN 4:1% LADTECH ADJUSTING RING WEDGE OR APPROVED EQUAL MAY BE USED.

MANHOLE FRAME & COVER

N.T.S.

NOT TO SCALE

CITY OF WEATHERFORD	DATE 01/2016	UTILITY DEPARTMENT	SHEET. #
	DRAWN BY CITY OF WEATHERFORD	WASTEWATER MANHOLE FRAME, COVER & PAD	U17

STANDARD DROP CONNECTION

N.T.S.

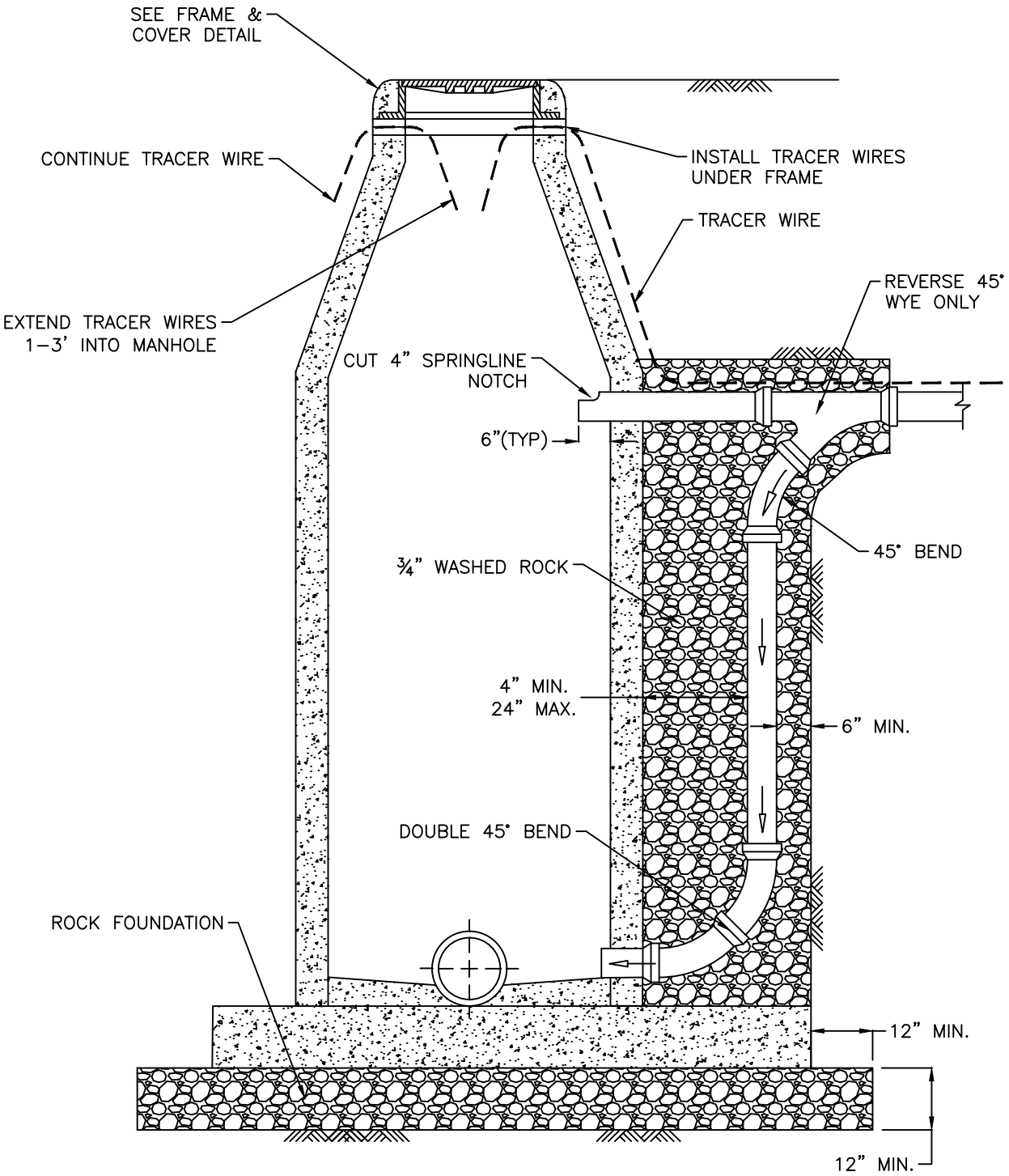

NOT TO SCALE

CITY OF WEATHERFORD	DATE 01/2016	UTILITY DEPARTMENT	SHEET. #
	DRAWN BY CITY OF WEATHERFORD	WASTEWATER MANHOLE OUTSIDE DROP CONNECTIONS	U18

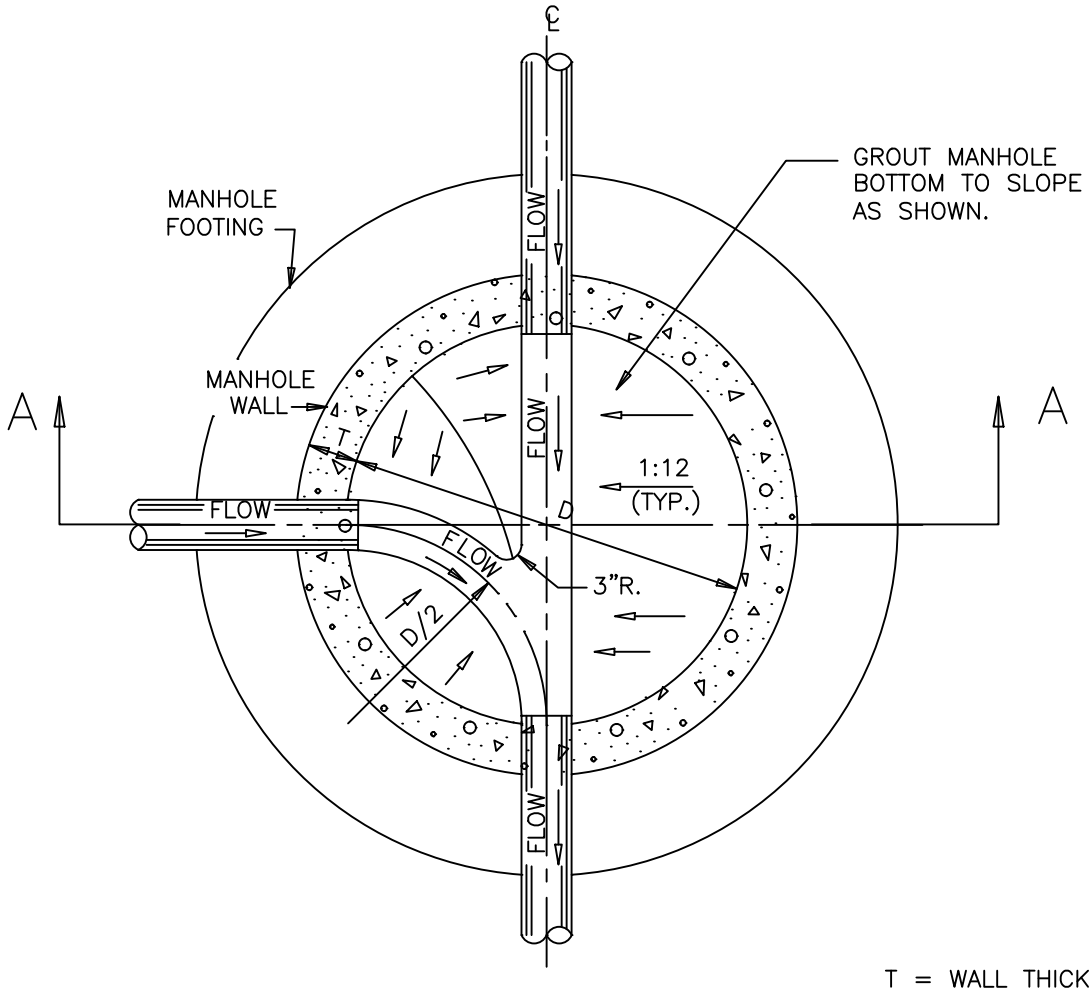

PLAN

N.T.S.

T = WALL THICKNESS
D = MANHOLE DIAMETER
d = PIPE DIAMETER

NOTE:
REFER TO MANHOLE STANDARD DRAWINGS FOR ADDITIONAL DETAIL OF M.H.

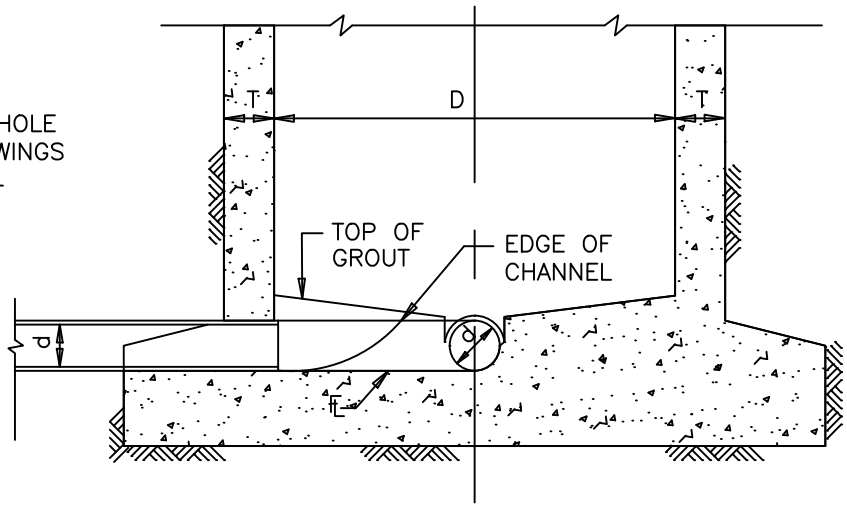

SECTION A–A

N.T.S.

NOT TO SCALE

CITY OF WEATHERFORD	DATE 01/2016	UTILITY DEPARTMENT	SHEET. #
	DRAWN BY CITY OF WEATHERFORD	WASTEWATER MANHOLE LINE INTERSECTION	U19

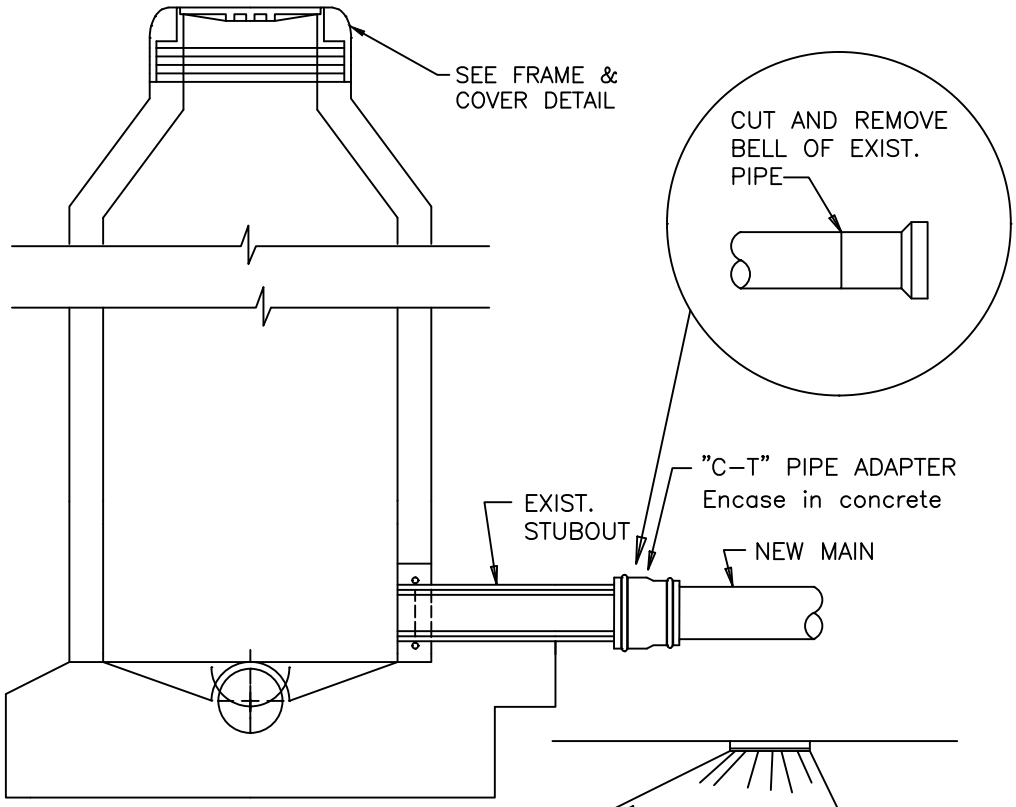

AT STUBOUT

N.T.S.

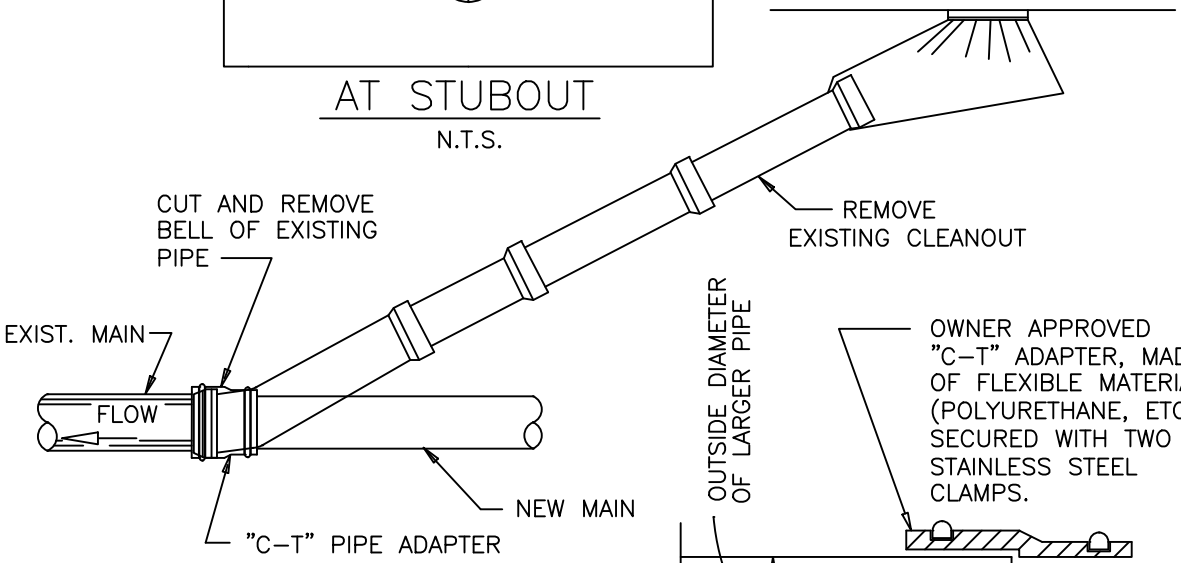

AT CLEANOUT

N.T.S.

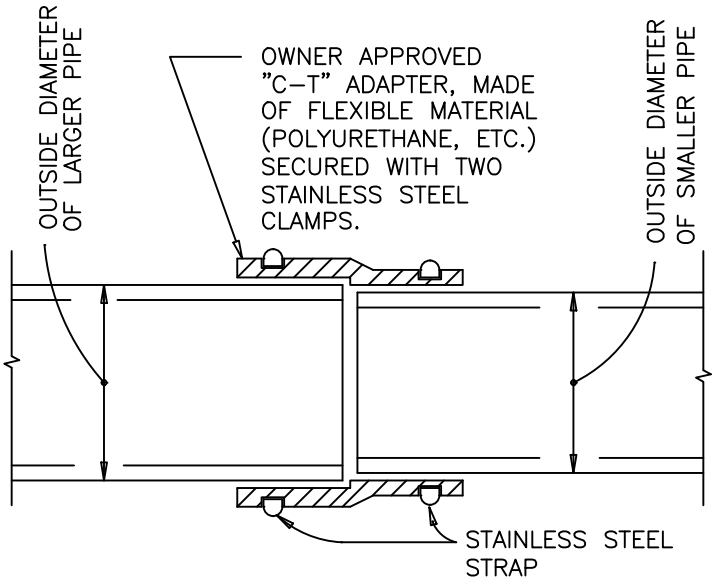

All "C–T" ADAPTERS MUST BE CONCRETE ENCASED

"C–T" PIPE ADAPTER

N.T.S.

NOTE:

THIS DETAIL FOR USE ONLY WHEN NEW MAIN WILL NOT MATE WITH EXISTING MAIN JOINT DUE TO DIFFERENT DIMENSIONS OR MATERIALS AND A MANHOLE IS NOT REQUIRED.

NOT TO SCALE

CITY OF WEATHERFORD	DATE 01/2016	UTILITY DEPARTMENT	SHEET. #
	DRAWN BY CITY OF WEATHERFORD	WASTEWATER MAIN TIE-IN	U20

NOTES:
1. PIPE AND FITTINGS MUST BE SDR-26 PVC OR DUCTILE IRON WITH CERAMIC EPOXY LINING AS INDICATED IN THE DRAWINGS.
2. PROVIDE RUBBER SLEEVE COUPLINGS WITH STAINLESS STEEL DOUBLE-BAND REPAIR SLEEVES TO CONNECT TO EXISTING SERVICE. TIGHTEN SLEEVES TO THE TORQUE RECOMMENDED BY THE MANUFACTURER.
3. SEWER SERVICE SHALL INCLUDE ALL APPURTENANCES FROM SEWER MAIN UP TO AND INCLUDING RUBBER SLEEVE COUPLING OR PLUG.

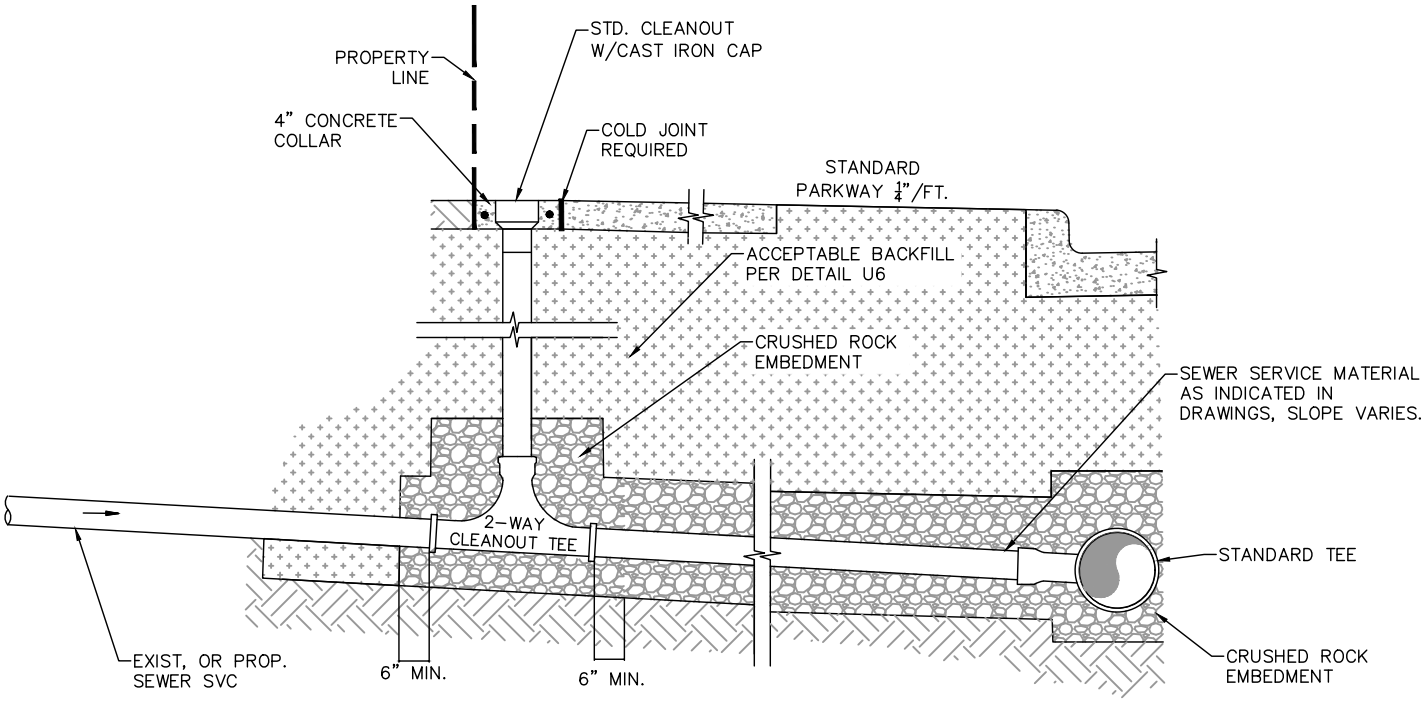

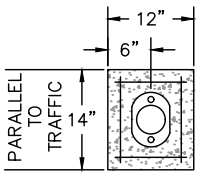

CONCRETE COLLAR (PLAN VIEW)

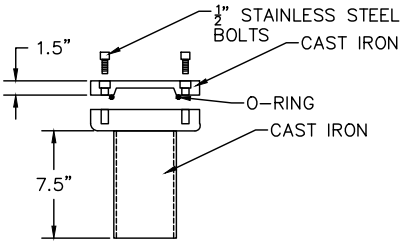

CAST IRON CLEANOUT W/S.S. BOLTS AND C.I. LID

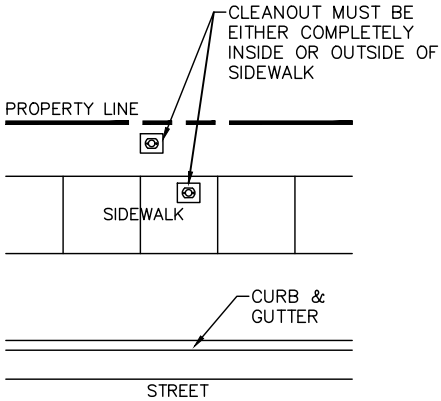

CAST IRON CLEANOUT W/S.S. BOLTS AND C.I. LID ALL AREAS

NOT TO SCALE

CITY OF WEATHERFORD	DATE 01/2016	UTILITY DEPARTMENT	SHEET. #
	DRAWN BY CITY OF WEATHERFORD	WASTEWATER LATERAL STANDARD INSTALLATION	U21

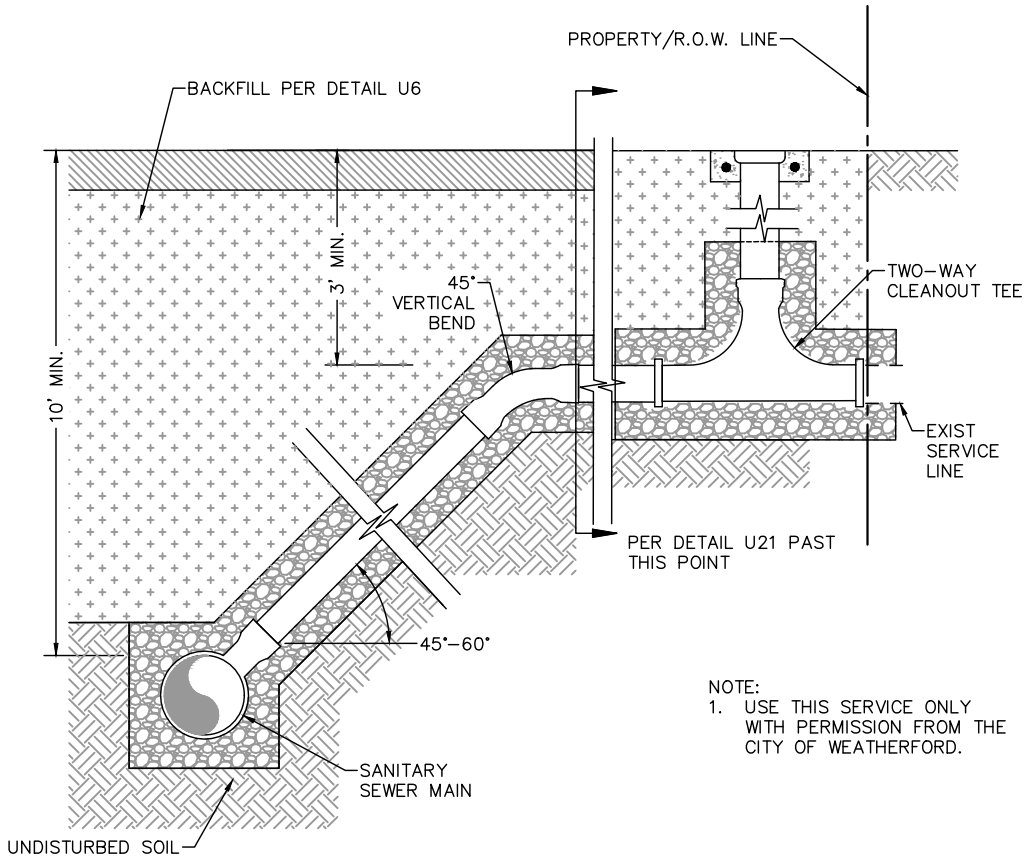

NOTE:
1. USE THIS SERVICE ONLY WITH PERMISSION FROM THE CITY OF WEATHERFORD.

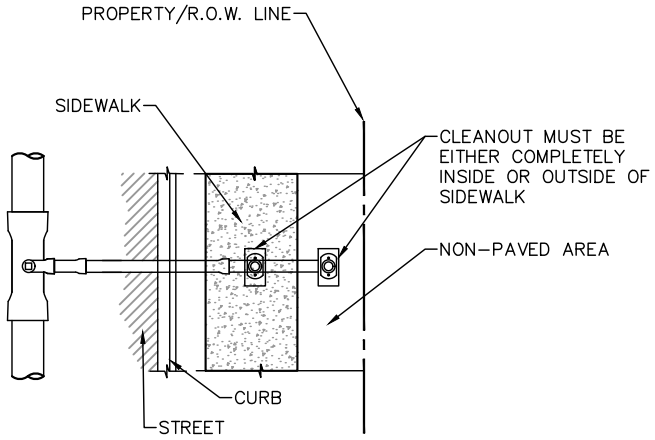

PLAN VIEW

NOT TO SCALE

CITY OF WEATHERFORD	DATE 01/2016	UTILITY DEPARTMENT	SHEET. #
	DRAWN BY CITY OF WEATHERFORD	WASTEWATER LATERAL DEEP INSTALLATION	U22

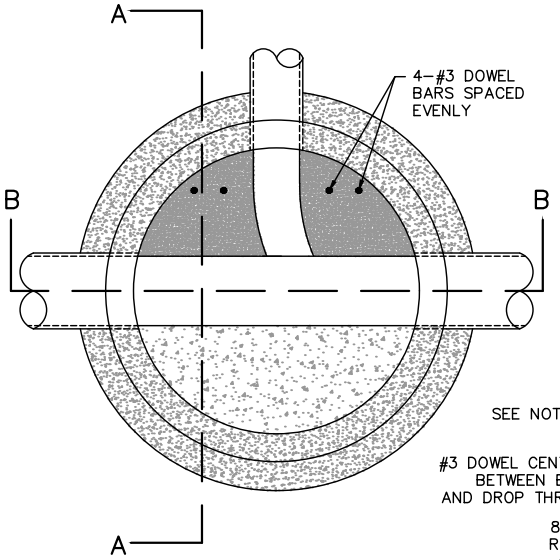

PLAN VIEW

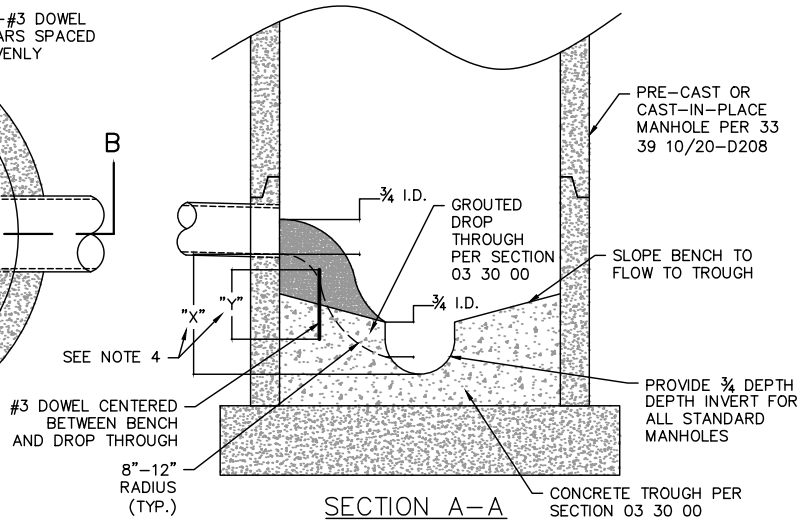

SECTION A–A

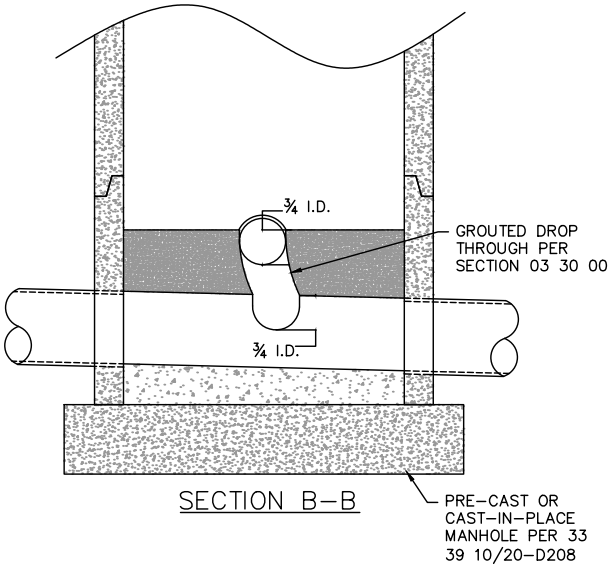

SECTION B–B

NOTES:

1. DROP THROUGH SHALL BE POURED MONOLITHICALLY WITH CAST–IN–PLACE BENCH, OR DOWELED AND GROUTED TO PRE–CAST BENCH.
2. DROP THROUGH SHALL EXTEND INTO MAIN–LINE TROUGH ½ THE INNER DIAMETER OF LATERAL.
3. WHERE LATERAL FLOW–LINE TO MAIN FLOW–LINE IS GREATER THAN 24" AN EXTERNAL DROP SHALL BE REQUIRED PER 33 39 10/20–D209
4. "X" SHALL BE NO MORE THAN 24" FROM FLOW–LINE TO FLOW–LINE. "Y" SHALL BE THE GREATER OF HALF OF "X" OR 6".

NOT TO SCALE

CITY OF WEATHERFORD	DATE	UTILITY DEPARTMENT	SHEET. #
	01/2016		U23
	DRAWN BY	WASTEWATER MANHOLE HYDRAULIC SLIDE	
	CITY OF WEATHERFORD		

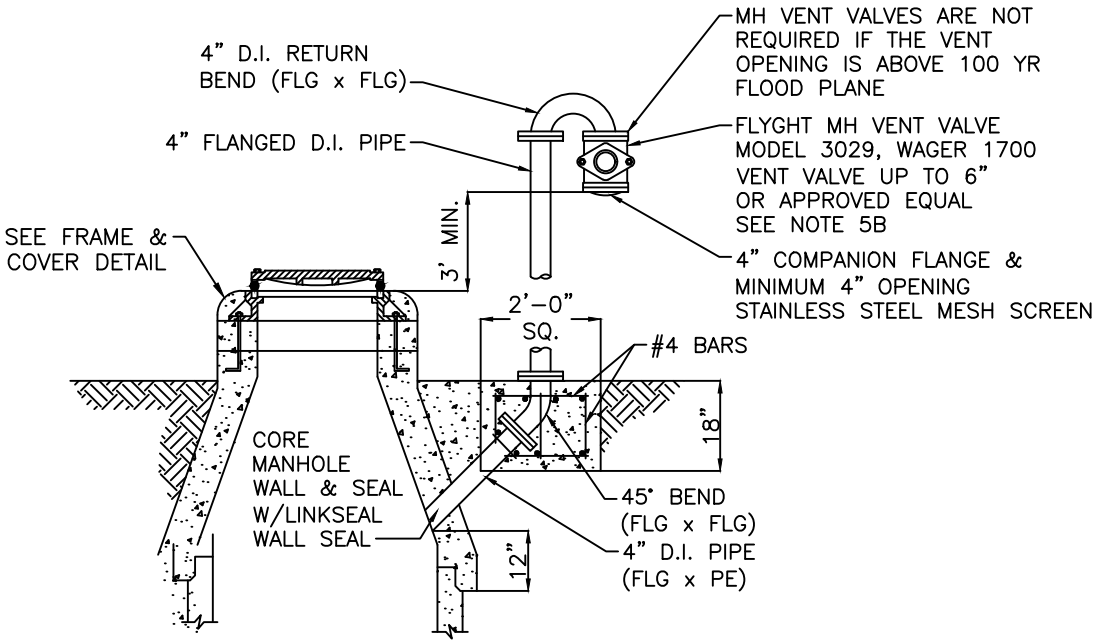

NOTES:

1. DUCTILE IRON PIPE & FITTINGS TO HAVE 40mil POLYETHYLENE INTERIOR COATING.

2. ALL BOLTS & NUTS TO BE 316 STAINLESS STEEL.

3. FINISH COATING:
   A. WIRE BRUSH TO REMOVE ALL DIRT & CONCRETE AND TO ROUGH UP FINISH.
   B. APPLY ONE PRIME COAT OF TNEMEC SERIES 37 CHEM PRIME (GRAY) TO 3mils DRY THICKNESS. GIVE SPECIAL ATTENTION AND SECOND COAT TO CORNERES AND BOLTS.
   C. APPLY ONE FINISH COAT OF TNEMEC SERIES 43-38 ALKYD ALUMINUM TO 2mils DRY THICKNESS.

4. VENT PIPES LONGER THAN 6' TO BE 6"ø D.I. PIPE AND FITTINGS.

NOT TO SCALE

CITY OF WEATHERFORD	DATE 01/2016	UTILITY DEPARTMENT	SHEET. #
	DRAWN BY CITY OF WEATHERFORD	WASTEWATER MANHOLE VENT	U24